COMPUTER ARCHITECTURE AND ORGANIZATION

Lecture 1: Introduction

Ms Sabika Raza

evaluation strategies throughout the semester

- Marks Division (**Theory**):
- 40 sessional marks (Assignments, Quiz, Presentation and Mid Term)
- 60 marks for final exam (Theory based)

- Marks Division (**Practical**):
- 30 sessional marks
- 20 marks finals (Lab + viva)

Reference books

- William Stallings , **“Computer Organization and Architecture”**(10th Edition)
- David A. Patterson & John L. Hennessy, **“ Computer Organization and Design”** (5th Edition)
- David A. Patterson & John L. Hennessy, **“ Computer Organization and Design”**

(RISC – V edition)

Computer Architecture:

- Computer Architecture deals with giving operational attributes of the computer or Processor to be specific. It deals with details like physical memory, ISA (Instruction Set Architecture) of the processor, the number of bits used to represent the data types, Input Output mechanism and technique for addressing memories.

Computer Organization:

- Computer Organization is realization of what is specified by the computer architecture .It deals with how operational attributes are linked together to meet the requirements specified by computer architecture. Some organizational attributes are hardware details, control signals, peripherals.

EXAMPLE:

- Say you are in a company that manufactures cars, design and all low-level details of the car come under computer architecture (abstract, programmers view), while making it’s parts piece by piece and connecting together the different components of that car by keeping the basic design in mind comes under computer organization (physical and visible).

Comparison

Computer Organization	Computer Architecture
Often called microarchitecture (low level)	Computer architecture (a bit higher level)
Transparent from programmer (ex. a programmer does not worry much how addition is implemented in hardware)	Programmer view (i.e. Programmer has to be aware of which instruction set used)
Physical components (Circuit design, Adders, Signals, Peripherals)	Logic (Instruction set, Addressing modes, Data types, Cache optimization)
How to do ? (implementation of the architecture)	What to do ? (Instruction set) It is about what is involved in instruction set.

Examples of Computer Architectures and organization

- **Examples of Computer Architectures**
- Von-Neumann Architecture
- Harvard Architecture
- Instruction Set Architecture
- Micro-architecture
- System Design

- **Examples of Computer Organization**
- CPU organization is classified into three categories based on the number of address fields:
- Organization of a single Accumulator.
- Organization of general registers
- Stack organization

Basic computer architecture

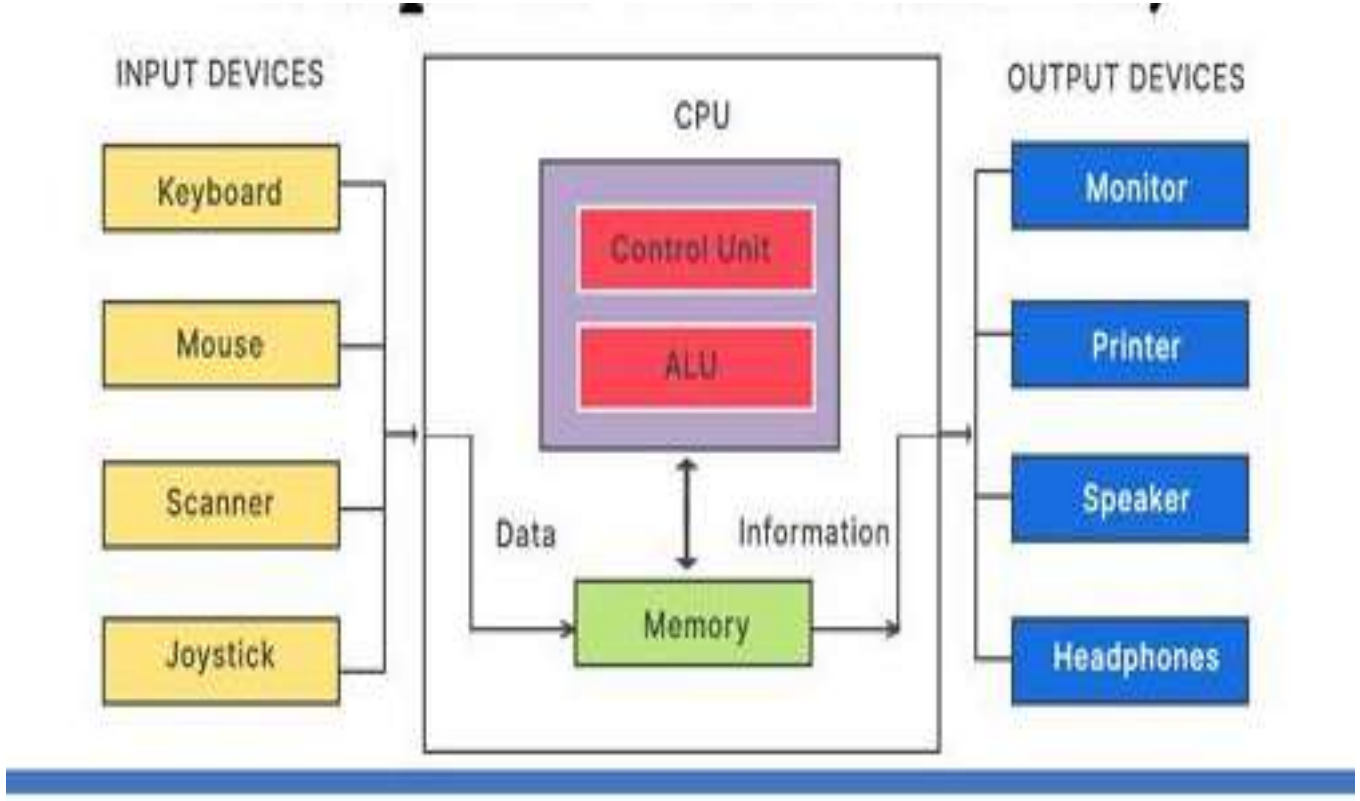

Structure - *simple single-processor computer*

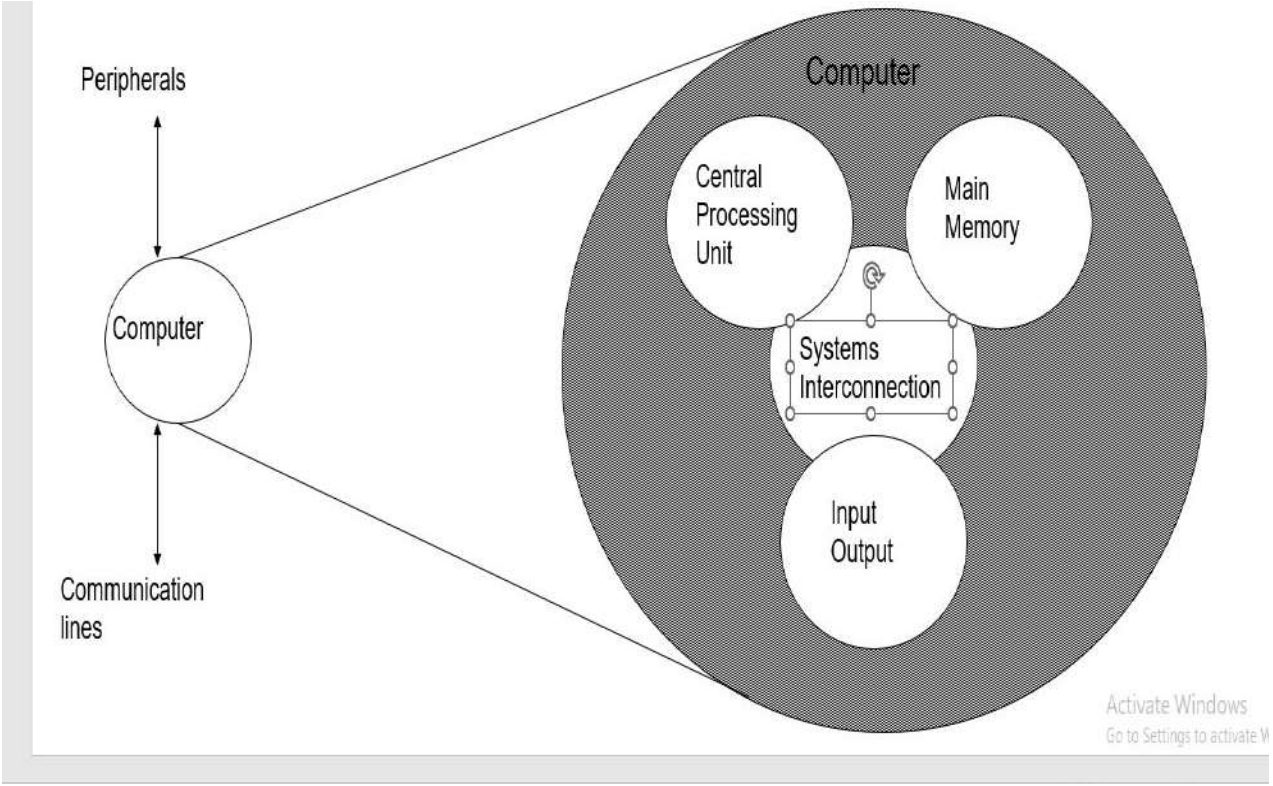

Structure - The Control Unit of single processor

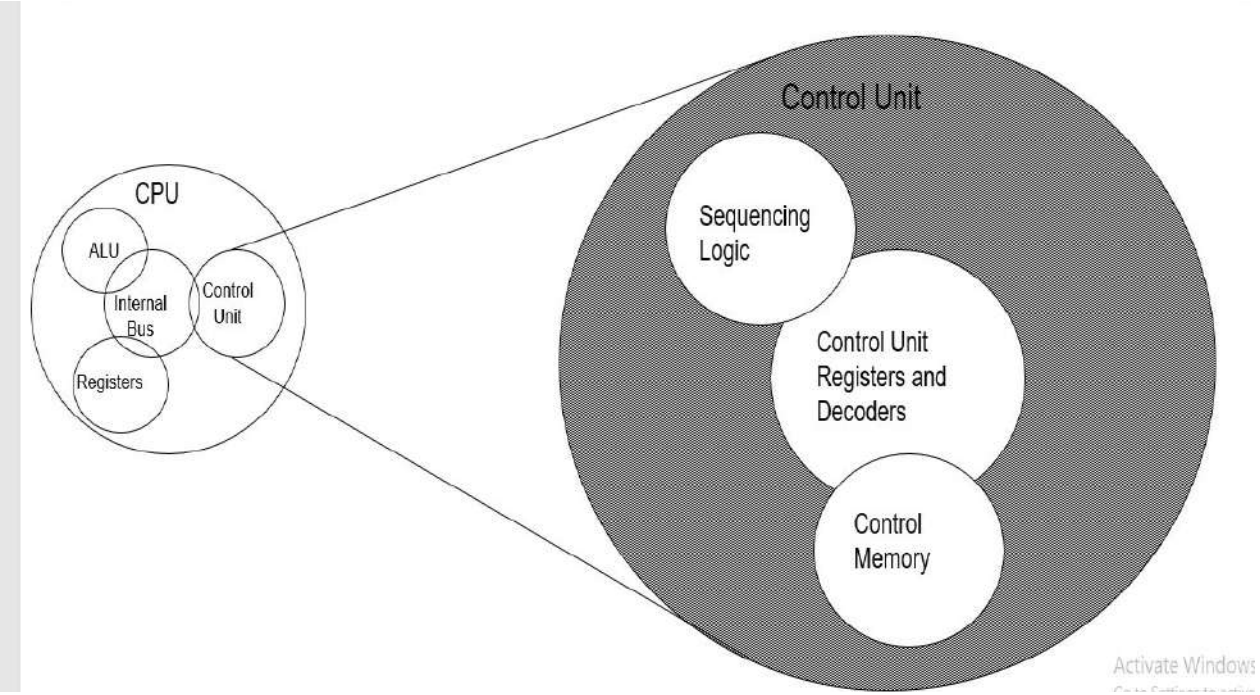

GENERATIONS OF A COMPUTER

- Generation in computer terminology is a change in technology a computer is/was being used. Initially, the generation term was used to distinguish between varying hardware technologies. But nowadays, generation includes both hardware and software, which together make up an entire computer system. There are totally five computer generations known till date. Each generation has been discussed in detail along with their time period and characteristics. Here approximate dates against each generations have been mentioned which are normally accepted. Following are the main five generations of computers

S.N.	Generation & Description
1	**First Generation** The period of first generation: 1946-1959. Vacuum tube based.
2	**Second Generation** The period of second generation: 1959-1965. Transistor based.
3	**Third Generation** The period of third generation: 1965-1971. Integrated Circuit based.
4	**Fourth Generation** The period of fourth generation: 1971-1980. VLSI microprocessor based.
5	**Fifth Generation** The period of fifth generation: 1980-onwards. ULSI microprocessor based

First generation

- The period of first generation was 1946-1959. The computers of first generation used vacuum tubes as the basic components for memory and circuitry for CPU (Central Processing Unit). These tubes, like electric bulbs, produced a lot of heat and were prone to frequent fusing of the installations, therefore, were very expensive and could be afforded only by very large organizations. In this generation mainly batch processing operating system were used. Punched cards, paper tape, and magnetic tape were used as input and output devices. The computers in this generation used machine code as programming language.

Cont.

The main features of first generation are:

- Vacuum tube technology
- Unreliable
- Supported machine language only
- Very costly
- Generated lot of heat
- Huge size
- Need of A.C.
- Non-portable
- Consumed lot of electricity

Cont.

- Some computers of this generation were: ▫
- ENIAC
- EDVAC
- UNIVAC
- IBM-701
- IBM-650

Second generation

- The period of second generation was 1959-1965. In this generation transistors were used that were cheaper, consumed less power, more compact in size, more reliable and faster than the first generation machines made of vacuum tubes. In this generation, magnetic cores were used as primary memory and magnetic tape and magnetic disks as secondary storage devices. In this generation assembly language and high-level programming languages like FORTRAN, COBOL were used. The computers used batch processing and multiprogramming operating system.

Cont.

- The main features of second generation are: ▫
- Use of transistors
- Reliable in comparison to first generation computers
- Smaller size as compared to first generation computers
- Generated less heat as compared to first generation computers
- Consumed less electricity as compared to first generation computers
- Faster than first generation computers
- Still very costly
- A.C. needed
- Supported machine and assembly languages

Cont.

- Some computers of this generation were:
- IBM 1620
- IBM 7094
- CDC 1604
- CDC 3600
- UNIVAC 1108

Third generation

- The period of third generation was 1965-1971. The computers of third generation used integrated circuits (IC's) in place of transistors. A single IC has many transistors, resistors and capacitors along with the associated circuitry. The IC was invented by Jack Kilby. This development made computers smaller in size, reliable and efficient. In this generation remote processing, time-sharing, multi-programming operating system were used. Highlevel languages (FORTRAN-II TO IV, COBOL, PASCAL PL/1, BASIC, ALGOL-68 etc.) were used during this generation

Cont.

- The main features of third generation are:
- IC used
- More reliable in comparison to previous two generations
- Smaller size
- Generated less heat
- Faster
- Lesser maintenance
- Still costly
- A.C needed
- Consumed lesser electricity
- Supported high-level language

Cont.

- Some computers of this generation were:
  - IBM-360 series
  - Honeywell-6000 series
  - PDP(Personal Data Processor)
  - IBM-370/168
  - TDC-316

Fourth generation

- The period of fourth generation was 1971-1980. The computers of fourth generation used Very Large Scale Integrated (VLSI) circuits. VLSI circuits having about 5000 transistors and other circuit elements and their associated circuits on a single chip made it possible to have microcomputers of fourth generation. Fourth generation computers became more powerful, compact, reliable, and affordable. As a result, it gave rise to personal computer (PC) revolution. In this generation time sharing, real time, networks, distributed operating system were used. All the high-level languages like C, C++, DBASE etc., were used in this generation

Cont.

- The main features of fourth generation are:
  - VLSI technology used
  - Very cheap
  - Portable and reliable
  - Use of PC’s
  - Very small size
  - Pipeline processing
  - No A.C. needed
  - Concept of internet was introduced
  - Great developments in the fields of networks
  - Computers became easily available

Cont.

- Some computers of this generation were:
- DEC 10
- STAR 1000
- PDP 11 ▫ CRAY-1(Super Computer)
- CRAY-X-MP(Super Computer)

Fifth Generation

- The period of fifth generation is 1980-till date. In the fifth generation, the VLSI technology became ULSI (Ultra Large Scale Integration) technology, resulting in the production of microprocessor chips having ten million electronic components. This generation is based on parallel processing hardware and AI (Artificial Intelligence) software. AI is an emerging branch in computer science, which interprets means and method of making computers think like human beings. All the high-level languages like C and C++, Java, .Net etc., are used in this generation.
- AI includes:
- Robotics
- Neural Networks
- Game Playing
- Development of expert systems to make decisions in real life situations.
- Natural language understanding and generation

- The main features of fifth generation are:
  - ULSI technology
  - Development of true artificial intelligence
  - Development of Natural language processing
  - Advancement in Parallel Processing
  - Advancement in Superconductor technology
  - More user friendly interfaces with multimedia features
  - Availability of very powerful and compact computers at cheaper rates

Cont.

- Some computer types of this generation are:
- Desktop
- Laptop
- Notebook
- Ultrabook
- Chromebook

COMPUTER TYPES

Classification based on Operating Principles Based on the operating principles, computers can be classified into one of the following types: -

1) Digital Computers

2) Analog Computers

3) Hybrid Computers

Digital Computers: - Operate essentially by counting. All quantities are expressed as discrete or numbers. Digital computers are useful for evaluating arithmetic expressions and manipulations of data (such as preparation of bills, ledgers, solution of simultaneous equations etc).

- Analog Computers:- An analog computer is a form of computer that uses the continuously changeable aspects of physical phenomena such as electrical, mechanical, or hydraulic quantities to model the problem being solved. In contrast, digital computers represent varying quantities symbolically, as their numerical values change

- Hybrid Computers:- are computers that exhibit features of analog computers and digital computers. The digital component normally serves as the controller and provides logical operations, while the analog component normally serves as a solver of differential equations

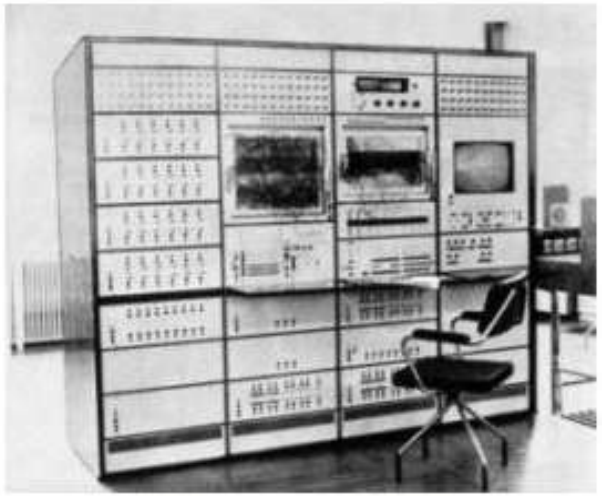

Classification digital Computer based on size and Capability

Based on size and capability, computers are broadly classified into

Micro Computers(Personal Computer) :

A microcomputer is the smallest general purpose processing system. The older pc started 8 bit processor with speed of 3.7MB and current pc 64 bit processor with speed of 4.66 GB. Examples: - IBM PCs, APPLE computers

Microcomputer can be classified into 2 types:

1. Desktops

2. Portables

The difference is portables can be used while travelling whereas desktops computers cannot be carried around.

The different portable computers are: -

1) Laptop
2) 2) Notebooks
3) 3) Palmtop (hand held)
4) 4) Wearable computers

Classification based on number of microprocessors

- Based on the number of microprocessors, computers can be classified into

a) Sequential computers

b) b) Parallel computers

Sequential computers: - Any task complete in sequential computers is with one microcomputer only. Most of the computers (today) we see are sequential computers where in any task is completed sequentially instruction after instruction from the beginning to the end.

Parallel computers: - The parallel computer is relatively fast. New types of computers that use a large number of processors. The processors perform different tasks independently and simultaneously thus improving the speed of execution of complex programs dramatically. Parallel computers match the speed of supercomputers at a fraction of the cost.

Classification based on word-length

- A binary digit is called “BIT”. A word is a group of bits which is fixed for a computer. The number of bits in a word (or word length) determines the representation of all characters in these many bits. Word length leis in the range from 16-bit to 64-bitsf or most computers of today

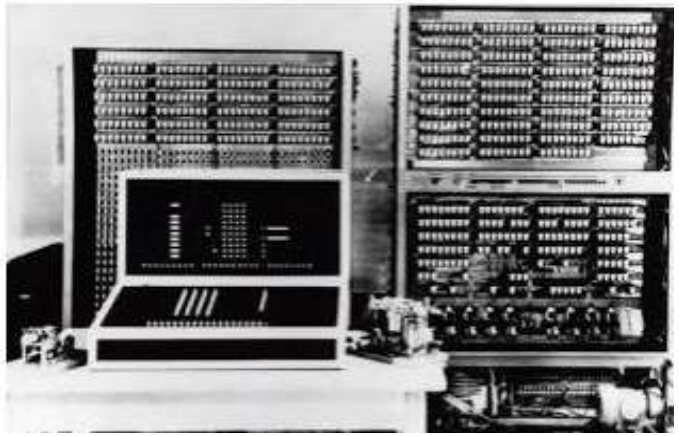

Classification based on number of users.

- Based on number of users, computers are classified into: -

Single User: - Only one user can use the resource at any time.

Multi User: - A single computer shared by a number of users at any time

Network: - A number of interconnected autonomous computers shared by a number of users at any time.

- COMPUTER TYPES

A computer can be defined as a fast electronic calculating machine that accepts the (data) digitized input information process it as per the list of internally stored instructions and produces the resulting information. List of instructions are called programs & internal storage is called computer memory.

The different types of computers are

1. Personal computers: - This is the most common type found in homes, schools, Business offices etc., It is the most common type of desk top computers with processing and storage units along with various input and output devices.
2. 2. Note book computers: - These are compact and portable versions of PC
3. 3. Work stations: - These have high resolution input/output (I/O) graphics capability, but with same dimensions as that of desktop computer. These are used in engineering applications of interactive design work.
4. 4. Enterprise systems: - These are used for business data processing in medium to large corporations that require much more computing power and storage capacity than work stations. Internet associated with servers have become a dominant worldwide source of all types of information.
5. 5. Super computers: - These are used for large scale numerical calculations required in the applications like weather forecasting etc.,

BASIC TERMINOLOGY

•Input: Whatever is put into a computer system.

•Data: Refers to the symbols that represent facts, objects, or ideas.

•Information: The results of the computer storing data as bits and bytes; the words, umbers, sounds, and graphics.

•Output: Consists of the processing results produced by a computer. •Processing: Manipulation of the data in many ways.

•Memory: Area of the computer that temporarily holds data waiting to be processed, stored, or output. •Storage: Area of the computer that holds data on a permanent basis when it is not immediately needed for processing.

•Assembly language program (ALP) –Programs are written using mnemonics

•Mnemonic –Instruction will be in the form of English like form

•Assembler –is a software which converts ALP to MLL (Machine Level Language)

•HLL (High Level Language) –Programs are written using English like statements

•Compiler -Convert HLL to MLL, does this job by reading source program at once

•Interpreter –Converts HLL to MLL, does this job statement by statement

•System software –Program routines which aid the user in the execution of programs eg: Assemblers, Compilers

•Operating system –Collection of routines responsible for controlling and coordinating all the activities in a computer system

Defining Performance

- When trying to choose among different computers, performance is an important attribute.
- If you were running a program on two different desktop computers, you'd say that the faster one is the desktop computer that gets the job done first.
- If you were running a datacenter that had several servers running jobs submitted by many users, you'd say that the faster computer was the one that completed the most jobs during a day.

Defining Performance (Contd..)

- As an individual computer user, you are interested in reducing **response time**; the time between the start and completion of a task , also called **execution time.**

- The total time required for the computer to complete a task, including:
- disk accesses
- memory accesses
- I/O activities
- operating system overhead
- CPU execution time, and so on.

Basic Measures of Computer Performance

- **Processor speed:** The speed of the processor, measured in GHz (gigahertz), determines how quickly the computer can execute instructions and process data.
- **Memory:** The amount and speed of the memory, including RAM (random access memory) and cache memory, can impact how quickly data can be accessed and processed by the computer.
- **Storage:** The speed and capacity of the storage devices, including hard drives and solid-state drives (SSDs), can impact the speed at which data can be stored and retrieved.

Basic Measures of Computer Performance

- **I/O devices:** The speed and efficiency of input/output devices, such as keyboards, mice, and displays, can impact the overall performance of the system.
- **Software optimization:** The efficiency of the software running on the system, including operating systems and applications, can impact how quickly tasks can be completed.

Basic Measures of Computer Performance

- **Throughput** is the total amount of work done in a given time.
- **CPU execution time** is the total time a CPU spends computing on a given task. It also excludes time for I/O or running other programs. This is also referred to as simply CPU time.
- Performance is determined by execution time as performance is inversely proportional to execution time.

Performance = (1 / Execution time)

Basic Measures of Computer Performance

Clock speed

- Operations performed by a processor, such as fetching an instruction, decoding the instruction, performing an arithmetic operation, and so on, are governed by a system clock.
- 1-GHz processor receives 1 billion pulses per second.
- The rate of pulses is known as the **clock rate,** or **clock speed.** One increment, or pulse, of the clock is referred to as a **clock cycle**, or a **clock tick.**
- The time between pulses is the **cycle time.**

Thank you ☺️

- That’s all about Performance of a system.

FUNCTIONAL UNIT

Chapter : 2

Ms Sabika Raza

FUNCTIONAL UNIT

- A computer consists of five functionally independent main parts input, memory, arithmetic logic unit (ALU), output and control unit.

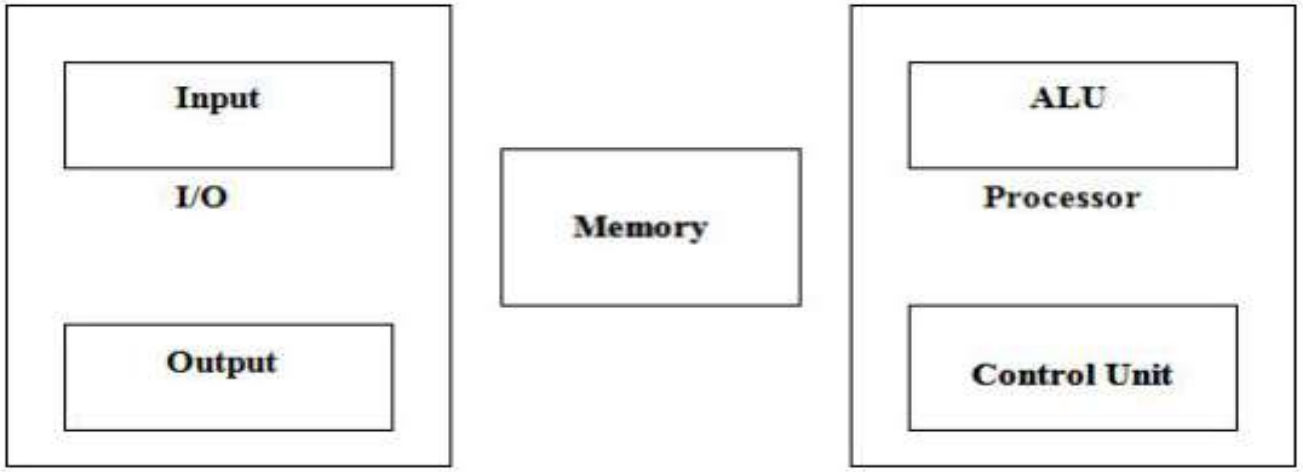

Functional units of computer

- Input device accepts the coded information as source program i.e. high level language. This is either stored in the memory or immediately used by the processor to perform the desired operations. The program stored in the memory determines the processing steps. Basically the computer converts one source program to an object program. i.e. into machine languag

- Finally the results are sent to the outside world through output device. All of these actions are coordinated by the control unit.

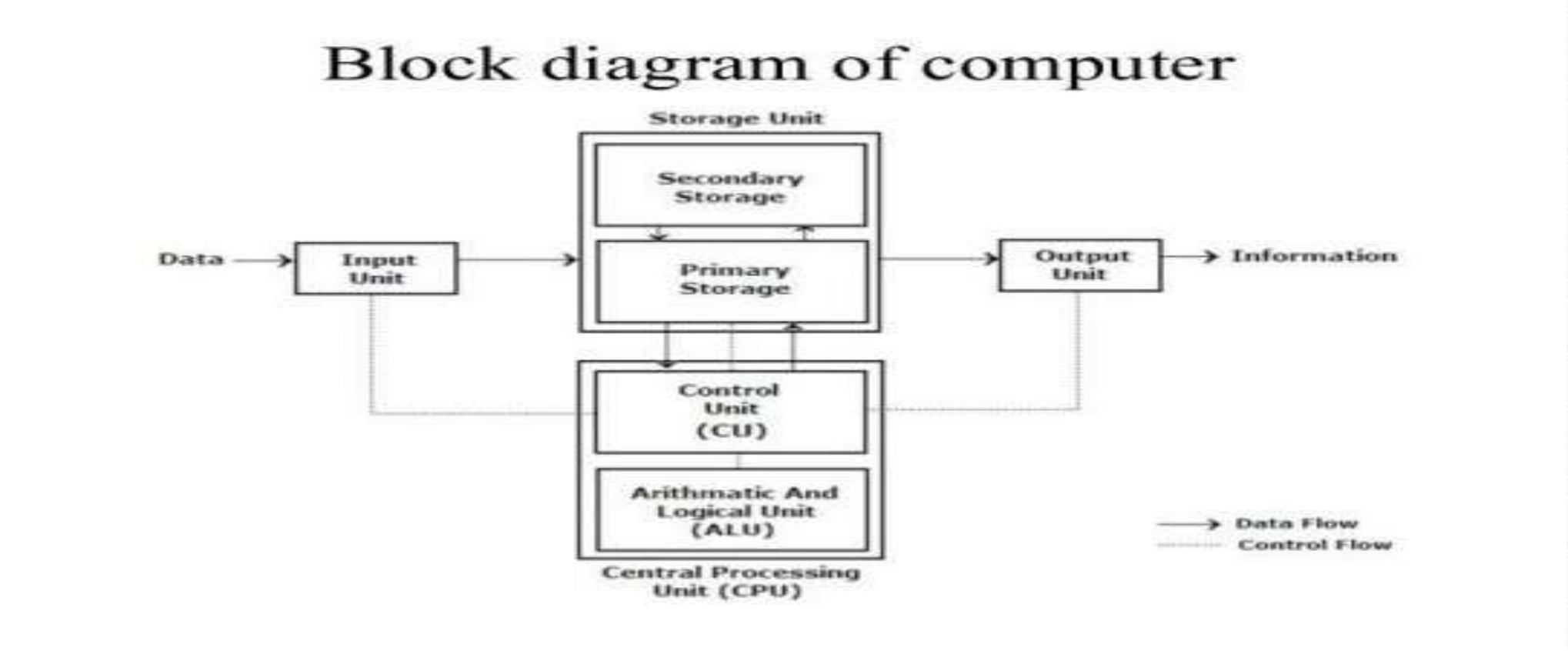

Input unit

- The source program/high level language program/coded information/simply data is fed to a computer through input devices keyboard is a most common type. Whenever a key is pressed, one corresponding word or number is translated into its equivalent binary code over a cable & fed either to memory or processor. Joysticks, trackballs, mouse, scanners etc are other input devices

- **Memory unit:** - Its function into store programs and data. It is basically to two types
- 1. Primary memory
- 2. Secondary memory

Word: In computer architecture, a word is a unit of data of a defined bit length that can be addressed and moved between storage and the computer processor. Usually, the defined bit length of a word is equivalent to the width of the computer's data bus so that a word can be moved in a single operation from storage to a processor register. For any computer architecture with an eight-bit byte, the word will be some multiple of eight bits. In IBM's evolutionary System/360 architecture, a word is 32 bits, or four contiguous eight-bit bytes. In Intel's PC processor architecture, a word is 16 bits, or two contiguous eight-bit bytes. A word can contain a computer instruction, a storage address, or application data that is to be manipulated (for example, added to the data in another word space).

Cont.

- The number of bits in each word is known as word length. Word length refers to the number of bits processed by the CPU in one go. With modern general purpose computers, word size can be 16 bits to 64 bits.
- The time required to access one word is called the memory access time. The small, fast, RAM units are called caches. They are tightly coupled with the processor and are often contained on the same IC chip to achieve high performance

Types of memory

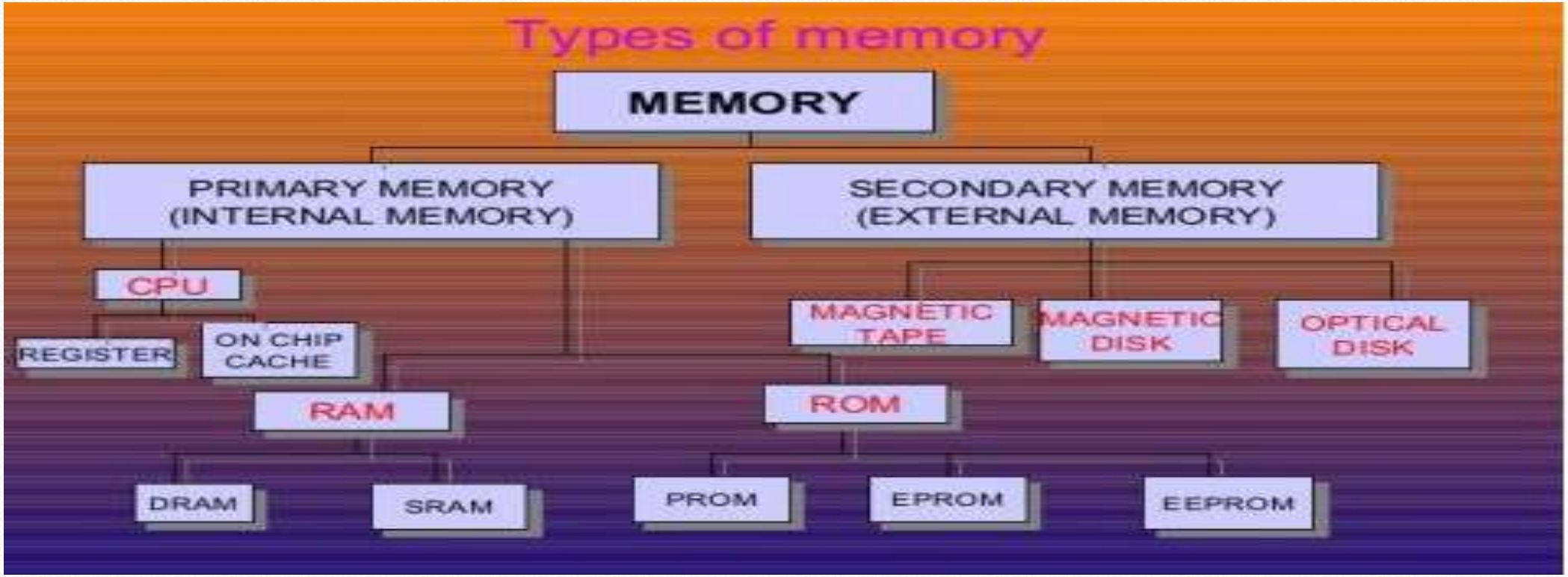

Primary memory

- Is the one exclusively associated with the processor and operates at the electronics speeds programs must be stored in this memory while they are being executed. The memory contains a large number of semiconductors storage cells. Each capable of storing one bit of information. These are processed in a group of fixed site called word

To provide easy access to a word in memory, a distinct address is associated with each word location. **Addresses** are numbers that identify memory location.

Number of bits in each word is called word length of the computer. Programs must reside in the memory during execution. Instructions and data can be written into the memory or read out under the control of processor. Memory in which any location can be reached in a short and fixed amount of time after specifying its address is called random-access memory (RAM). The time required to access one word in called memory access time. Memory which is only readable by the user and contents of which can't be altered is called read only memory (ROM) it contains operating system.

Caches are the small fast RAM units, which are coupled with the processor and are often contained on the same IC chip to achieve high performance. Although primary storage is essential it tends to be expensive.

Secondary Memory

- Is used where large amounts of data & programs have to be stored, particularly information that is accessed infrequently.

  Examples: - Magnetic disks & tapes, optical disks (ie CD-ROM's), floppies etc.,

Arithmetic logic unit (ALU):-

- Most of the computer operators are executed in ALU of the processor like addition, subtraction, division, multiplication, etc. the operands are brought into the ALU from memory and stored in high speed storage elements called register. Then according to the instructions the operation is performed in the required sequence.

- The control and the ALU are may times faster than other devices connected to a computer system. This enables a single processor to control a number of external devices such as key boards, displays, magnetic and optical disks, sensors and other mechanical controllers.

- Output unit:- These actually are the counterparts of input unit. Its basic function is to send the processed results to the outside world.

Examples:- Printer, speakers, monitor etc.

Control unit:- It effectively is the nerve center that sends signals to other units and senses their states. The actual timing signals that govern the transfer of data between input unit, processor, memory and output unit are generated by the control unit.

FUNCTIONAL UNITS OF COMPUTER DETAIL

WEEK 2

WHAT IS COMPUTER?

- **C**ommon **O**perating **M**achine **P**articularly/**P**urposely **U**sed for **T**echnological/**T**rade, **E**ducational and **R**esearch.

BASIC FUNCTION OF A COMPUTER

- In general terms, there are only four basic functions that a computer can perform:
- ■ **Data processing:**
- Data may take a wide variety of forms, and the range of processing requirements is broad. However, we shall see that there are only a few fundamental methods or types of data processing.
- ■ **Data storage:**
- Even if the computer is processing data on the fly, the computer must temporarily store at least those pieces of data that are being worked on at any given moment. Thus, there is at least a short- term data storage function.
- Equally important, the computer performs a long- term data storage function.
- Files of data are stored on the computer for subsequent retrieval and update.

BASIC FUNCTION OF A COMPUTER (CONTD….)

- **Data movement:**
- The computer's operating environment consists of devices that serve as either sources or destinations of data.
- When data are received from or delivered to a device that is directly connected to the computer, the process is known as input–Output (I/O), and the device is referred to as a peripheral.
- When data are moved over longer distances, to or from a remote device, the process is known as data communications.
- ■ **Control:**
- Within the computer, a control unit manages the computer's resources and orchestrates the performance of its functional parts in response to instructions.

FUNCTIONAL UNITS OF DIGITAL SYSTEM

- Computer is a processing machine that process the information in digital form i.e. (0's & 1's).
- Means digital computer can only understand binary language (0's & 1's). If any analog quantity is to be processed, they must be converted into digital form before processing.
- The computer architecture of the digital devices you use in your everyday life follows a set of instructions. These instructions are given by the functional units of a computer to the different hardware components. The hardware devices implement the instructions given by the functional units of computer.
- You are already familiar with the hardware devices. They consist of the common keyboard, mouse, and the display of a computer. Moreover, even electronic circuits make up an important part of the hardware.
- However, a computer system cannot work properly work without its functional units. They are more essential parts of a computer system.
- **Input unit,**
- **Central Processing Unit,**
- **Memory unit Arithmetic & logical unit,**
- **Control unit**
- **Output unit.**

FUNCTIONAL UNITS OF A DIGITAL SYSTEM

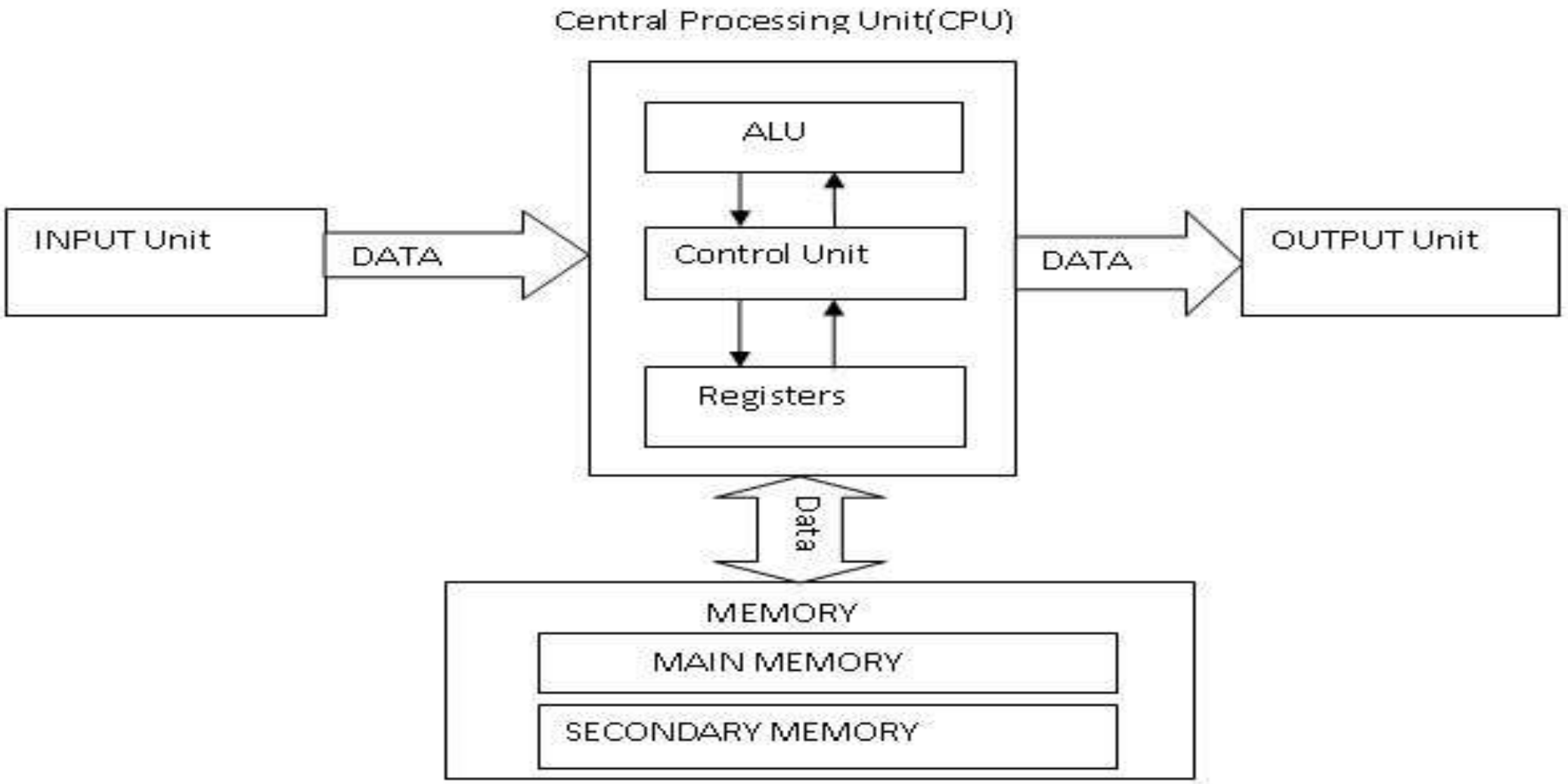

WHAT DO THE FUNCTIONAL UNITS DO?

- All five functional units are responsible for particular tasks. Below we will discuss how these functional units of computer contribute to processing and solving complex problems.

Input Unit:

- Computers need to receive data and instructions to solve any problem. The input unit links the external world or environment to the computer system. It consists of one or more input devices.
- The source program/high level language program/coded information/simply data is fed to a computer through input devices keyboard is a most common type.
- Whenever a key is pressed, one corresponding word or number is translated into its equivalent binary code over a cable & fed either to memory or processor.
- Joysticks, trackballs, mouse, scanners etc are other input devices.

FUNCTIONAL UNITS OF A DIGITAL SYSTEM (CONTD…)

Central Processing Unit(CPU)

Once the data and instructions are received from the input device, they are to be processed in this unit. So it can be considered the heart or brain of the computer system. It consists of three major units:

- CU
- ALU
- Registers

CONTROL UNIT

- The control unit is an essential part of the computer as it controls data flow which is sent and received by the CPU. The control unit acts as a coordinator. In this way, the control unit is responsible for accepting the input of the data, placing it in memory, processing the stored input, and generating the output. In this way, it can be seen that the control unit is also an interpreter which decodes the information, converts it into executable data, and instructs the other components of the computer system to undertake the required action.
- 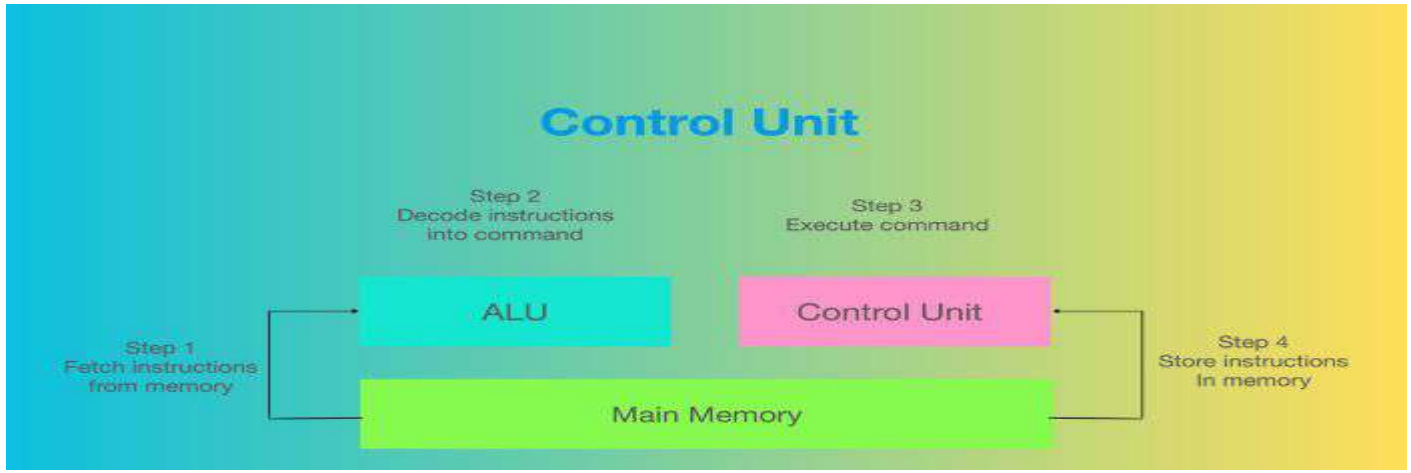

FUNCTIONAL UNITS OF A DIGITAL SYSTEM (CONTD…)

- **Arithmetic and Logic Unit**: Most of the computer operations are executed in ALU of the processor like addition, subtraction, division, multiplication, etc. the operands are brought into the ALU from memory and stored in high speed storage elements called register.
- Then according to the instructions the operation is performed in the required sequence.
- **Register:** A register may hold an instruction, a storage address, or any kind of data (such as a bit sequence or individual characters). Some instructions specify registers as part of the instruction. For example, an instruction may specify that the contents of two defined registers be added together and then placed in a specified register.

FUNCTIONAL UNITS OF A DIGITAL SYSTEM (CONTD…)

Memory Unit:

- The data and instructions required for processing have to be stored in the memory unit before actual processing starts.
- Similarly, the results generated have to be preserved before it is displayed.
- The memory unit thus provides space to store input data, intermediate results and final output generated.

Output Unit :

- It is used to print or display the result obtained by the execution of a program.

COMPUTER COMPONENTS

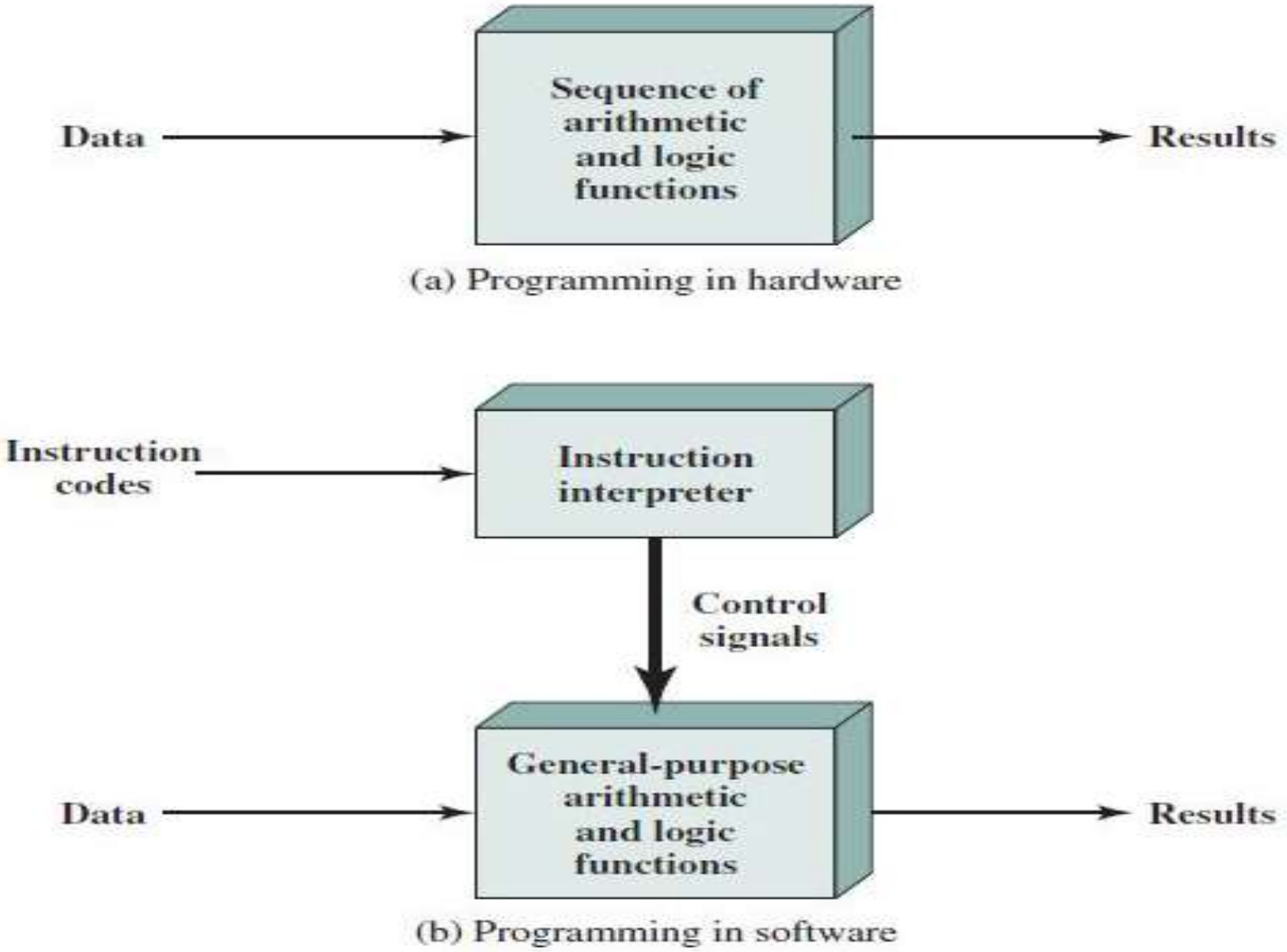

(a) Programming in hardware

(b) Programming in software

COMPUTER COMPONENTS: HARDWARE PROGRAMMING

- There is a small set of basic logic components that can be combined in various ways to store binary data and perform arithmetic and logical operations on that data.
- If there is a particular computation to be performed, a configuration of logic components designed specifically for that computation could be constructed.
- We can think of the process of connecting the various components in the desired configuration as a form of programming. The resulting "program" is in the form of hardware and is termed a ***hardwired program.***

COMPUTER COMPONENTS: SOFTWARE PROGRAMMING

- Now consider this alternative. Suppose we construct a general-purpose configuration of arithmetic and logic functions.
- This set of hardware will perform various functions on data depending on control signals applied to the hardware. With general-purpose hardware, the system accepts data and control signals and produces results.
- Thus, instead of rewiring the hardware for each new program, the programmer merely needs to supply a new set of control signals.
- Each code is, in effect, an instruction, and part of the hardware interprets each instruction and generates control signals. To distinguish this new method of programming, a sequence of codes or instructions is called *software*.

INTERACTION OF CPU AND MAIN MEMORY

- The CPU exchanges data with memory. For this purpose, it typically makes use of two internal (to the CPU) registers:
- A memory address register **(MAR),** which specifies the address in memory for the next read or write,
- A memory buffer register **(MBR),** which contains the data to be written into memory or receives the data read from memory.
- Similarly, an I/O address register **(I/OAR)** specifies a particular I/O device.
- An I/O buffer register**(I/OBR)** is used for the exchange of data between an I/O module and the CPU.

COMPUTER COMPONENTS: TOP-LEVEL VIEW

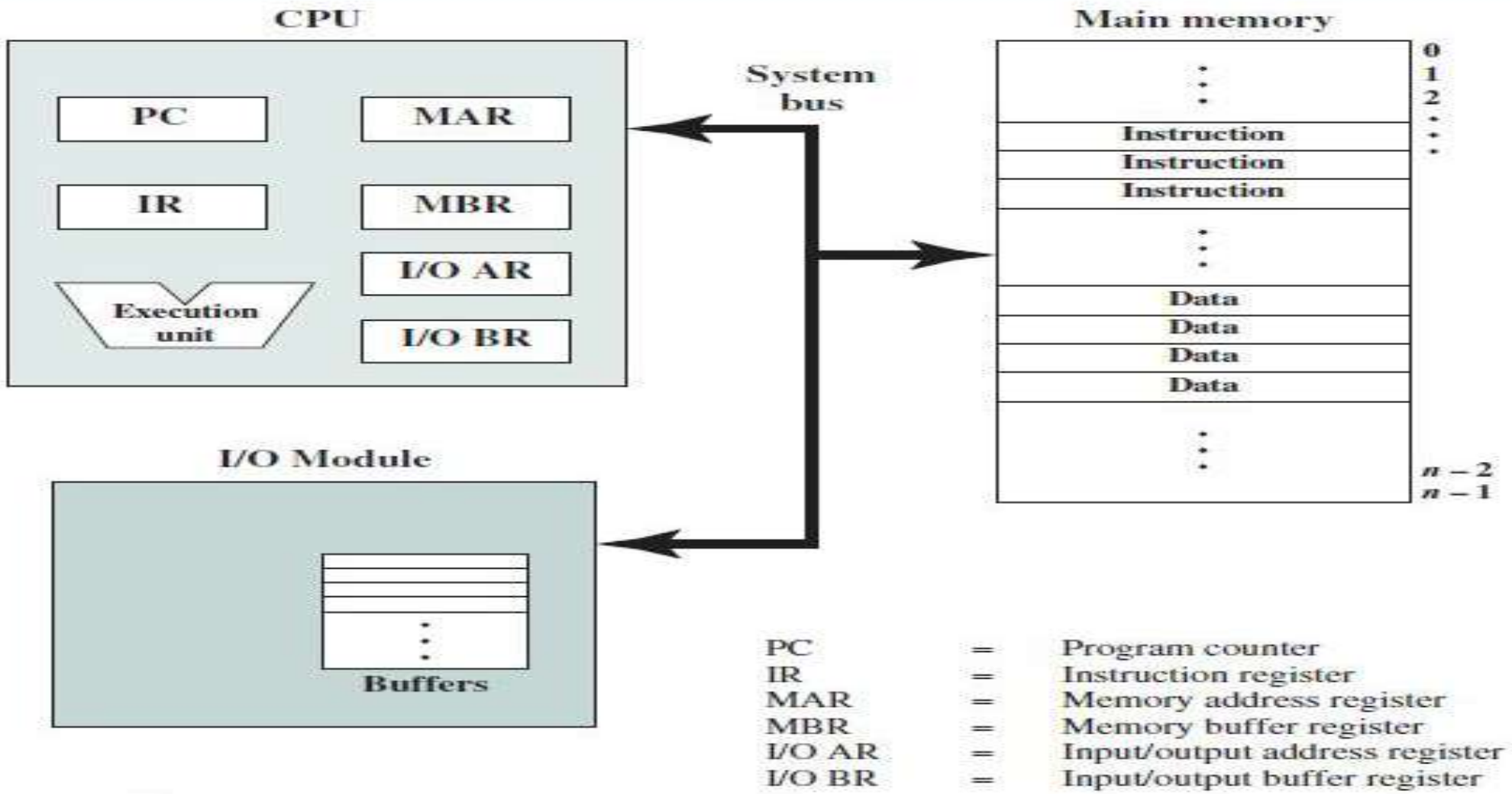

Figure 3.2 Computer Components: Top-Level View

INSTRUCTION FETCH AND EXECUTE

- In its simplest form, instruction processing consists of two steps:
- The processor reads (fetches) instructions from memory one at a time and executes each instruction.
- Program execution consists of repeating the process of instruction fetch and instruction execution.
- The instruction execution may involve several operations and depends on the nature of the instruction.
- The processing required for a single instruction is called an **instruction cycle.**

INSTRUCTION FETCH AND EXECUTE (CONTD…)

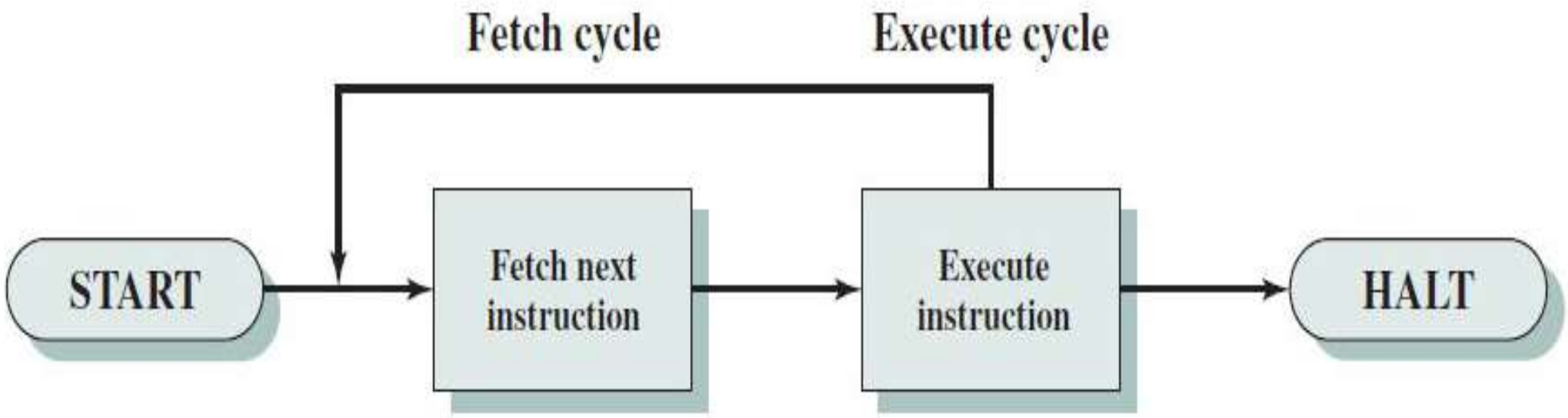

Figure 3.3 Basic Instruction Cycle

THANK YOU

TO BE CONTINUED ……

BASIC OPERATIONAL CONCEPTS

Chapter #3 ; Lecture # 5, Week # 3

What is the basic Operation of Computer?

- **To execute a program/ command/ set of instructions:**

- The primary function of a computer system is to execute a program, sequence of instructions. These instructions are stored in computer memory.
- These instructions are executed to process data which are already loaded in the computer memory through some input devices.
- After processing the data, the result is either stored in the memory for further reference, or it is sent to the outside world through some output port.

How is it done ?

- To perform the execution of an instruction, in addition to the arithmetic logic unit, and control unit, the processor contains a number of registers used for temporary storage of data and some special function registers.
- For now, lets take an example of a simple instruction execution in the next slide.

- **For example, a processor includes an instruction, expressed symbolically as ADD A,B; that stores the sum of the contents of memory locations B and A into memory location A. A single instruction cycle with the following steps occurs:**

- Fetch the ADD instruction.
- Read the contents of memory location A into the processor.
- Read the contents of memory location B into the processor.
- In order that the contents of A are not lost, the processor must have at least two registers for storing memory values, rather than a single accumulator.
- Add the two values.
- Write the result from the processor to memory location A.

Operating steps

1. Programs reside in the memory & usually get these instructions through the I/P unit.
2. Execution of the program starts when the PC is set to point at the first instruction of the program.
3. Contents of PC are transferred to MAR and a Read Control Signal is sent to the memory.
4. After the time required to access the memory elapses, the address word is read out of the memory and loaded into the MDR.
5. Now contents of MDR are transferred to the IR & now the instruction is ready to be decoded and executed.
6. If the instruction involves an operation by the ALU, it is necessary to obtain the required operands.

Operating steps

7. An operand in the memory is fetched by sending its address to MAR & Initiating a read cycle.
8. When the operand has been read from the memory to the MDR, it is transferred from MDR to the ALU.
9. After one or two such repeated cycles, the ALU can perform the desired operation.
10. If the result of this operation is to be stored in the memory, the result is sent to MDR.
11. Address of location where the result is stored is sent to MAR & a write cycle is initiated.
12. The contents of PC are incremented so that PC points to the next instruction that is to be executed.

Analyzing how Processor and Memory are Connected

- **Processors have various registers to perform various functions :-**
- **Program Counter** :- It contains the memory address of next instruction to be fetched.
- **Instruction Register**:- It holds the instruction which is currently being executed.
- **MDR** :- It facilities communication with memory. It contains the data to be written into or read out of the addressed location.
- **MAR** :- It holds the address of the location that is to be accessed
- There are **'n' general purpose registers** that is R0 to Rn-1

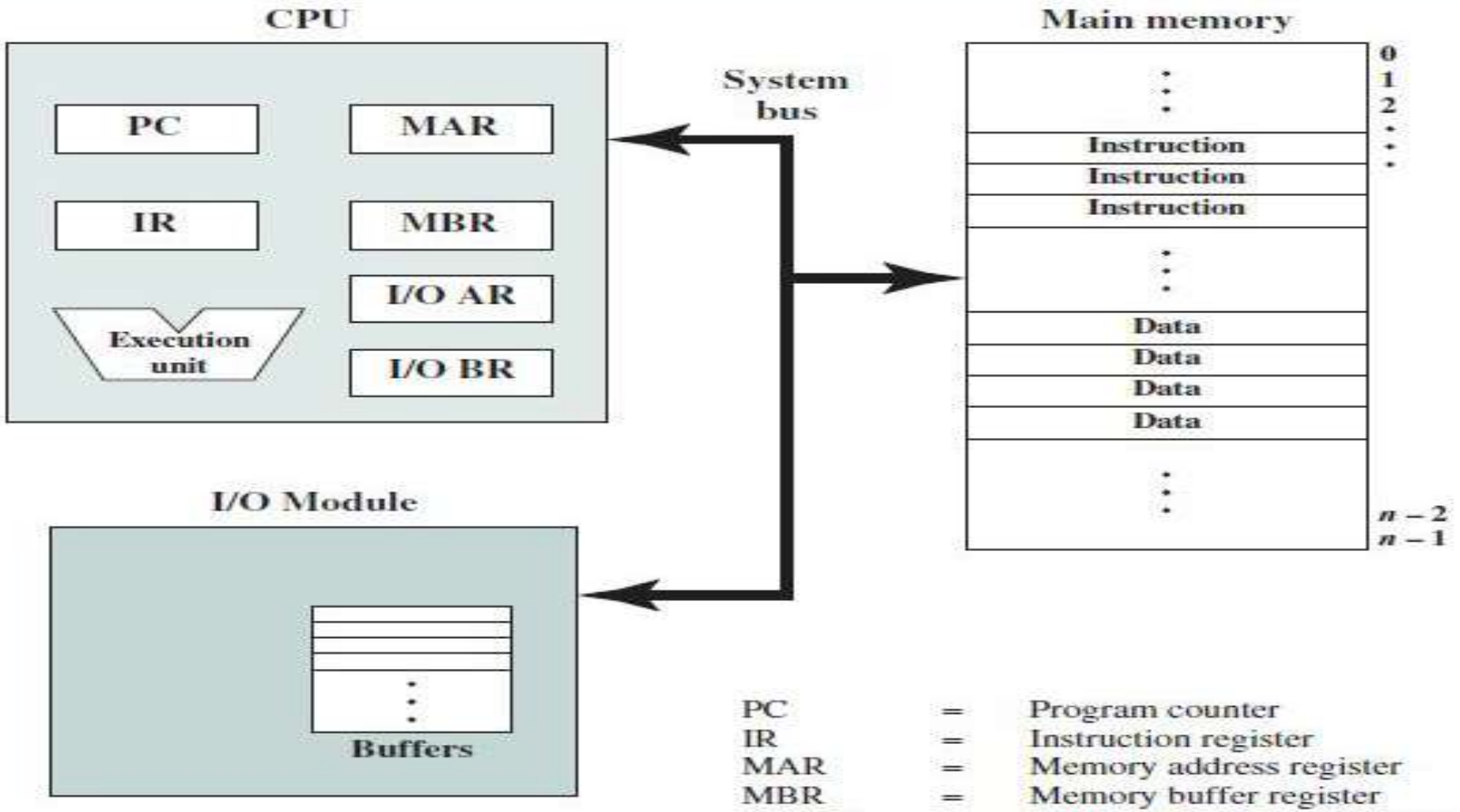

PC = Program counter
IR = Instruction register
MAR = Memory address register
MBR = Memory buffer register
I/O AR = Input/output address register
I/O BR = Input/output buffer register

Figure 3.2 Computer Components: Top-Level View

- The **PC** is one of the most critical registers in CPU.
- The Program counter monitors the execution of instructions. It keeps track on which instruction is being executed and what the next instruction will be.
- The instruction register **IR** is used to hold the instruction that is currently being executed.
- The contents of IR are available to the control unit, which generate the timing signals that control, the various processing elements involved in executing the instruction.
- The two registers **MAR** and **MDR** are used to handle the data transfer between the main memory and the processor.

Working Explanation

- A **PC** is set to point to the first instruction of the program.
- The contents of the **PC** are transferred to the **MAR** and a Read control signal is sent to the memory.
- The addressed word is fetched from the location which is mentioned in the **MAR** and loaded into **MDR**.

Bus Structures and Operation

Buses

- A bus is a shared communication link, which uses one set of wires to connect multiple subsystems.
- The two major advantages of the bus organization are versatility and low cost.
- Most modern computers use single bus arrangement for connecting I/O devices to CPU & Memory.
- The bus enables all the devices connected to it to exchange information.

Buses

- Bus consists of 3 set of lines : *Address, Data, Control*
- Processor places a particular address (unique for an I/O Dev.) on address lines.
- Device which recognizes this address responds to the commands issued on the Control lines.
- Processor requests for either Read / Write.
- The data will be placed on Data lines.

Data Bus

- Carries data
  - Remember that there is no difference between "data" and "instruction" at this level
- Width is a key determinant of performance
  - 8, 16, 32, 64 bit

Address bus

- Identify the source or destination of data
- e.g. CPU needs to read an instruction (data) from a given location in memory
- Bus width determines maximum memory capacity of system
  - e.g. 8080 has 16 bit address bus giving 64k address space

Control Bus

- Control and timing information
  - Memory read/write signal
  - Interrupt request
  - Clock signals
  - Reset
  - Bus request / bus grant
  - Transfer ACK
  - I/O read and I/O write

Bus Interconnection Scheme

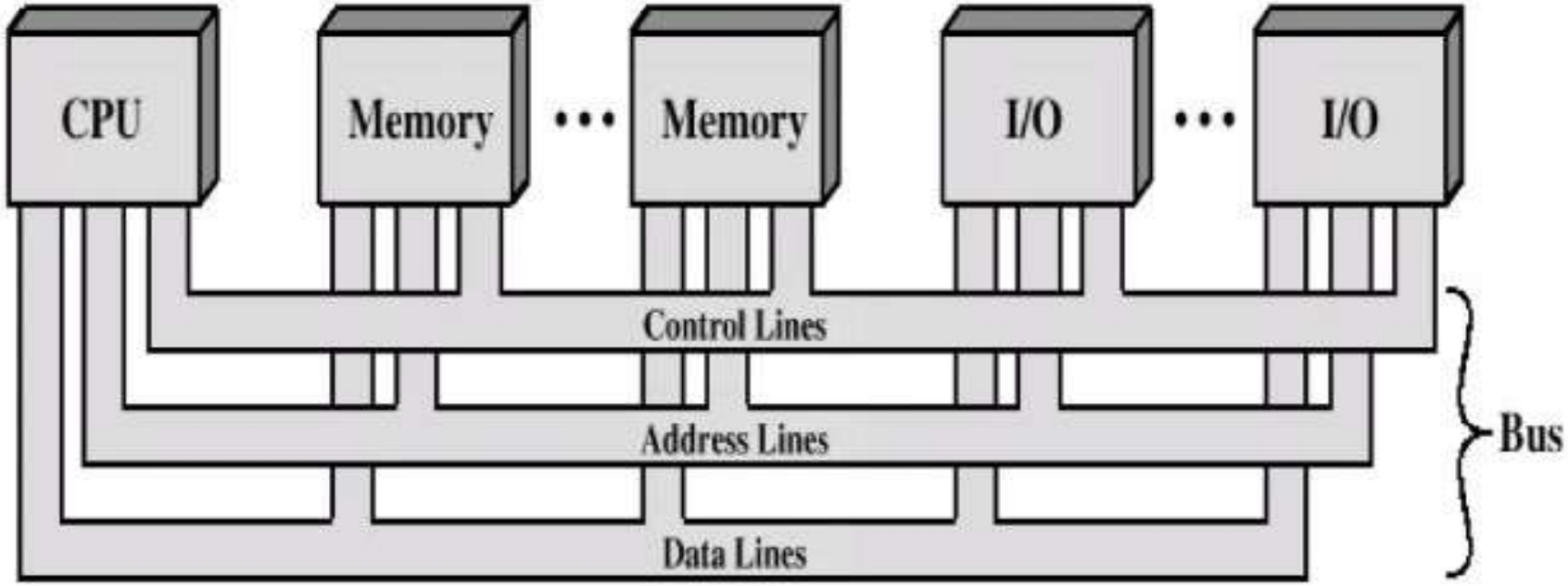

Big and Yellow?

- What do buses look like?
  - Parallel lines on circuit boards
  - Ribbon cables

Registers

EXPLANATION

What is register??

- Processor operations mostly involve processing data. This data can be stored in memory and accessed from thereon. However, reading data from and storing data into memory slows down the processor, as it involves complicated processes of sending the data request across the control bus and into the memory storage unit and getting the data through the same channel.

- To speed up the processor operations, the processor includes some internal memory storage locations, called **registers**.
- The registers store data elements for processing without having to access the memory. A limited number of registers are built into the processor chip.

Processor Registers??

- There are ten 32-bit and six 16-bit processor registers in IA-32 architecture. The registers are grouped into three categories –
- General registers,
- Control registers, and
- Segment registers.

The general registers are further divided into the following groups –

- Data registers,
- Pointer registers, and
- Index registers.

Data Registers

- Four 32-bit data registers are used for arithmetic, logical, and other operations. These 32-bit registers can be used in three ways –
- As complete 32-bit data registers: EAX, EBX, ECX, EDX.
- Lower halves of the 32-bit registers can be used as four 16-bit data registers: AX, BX, CX and DX.
- Lower and higher halves of the above-mentioned four 16-bit registers can be used as eight 8-bit data registers: AH, AL, BH, BL, CH, CL, DH, and DL.

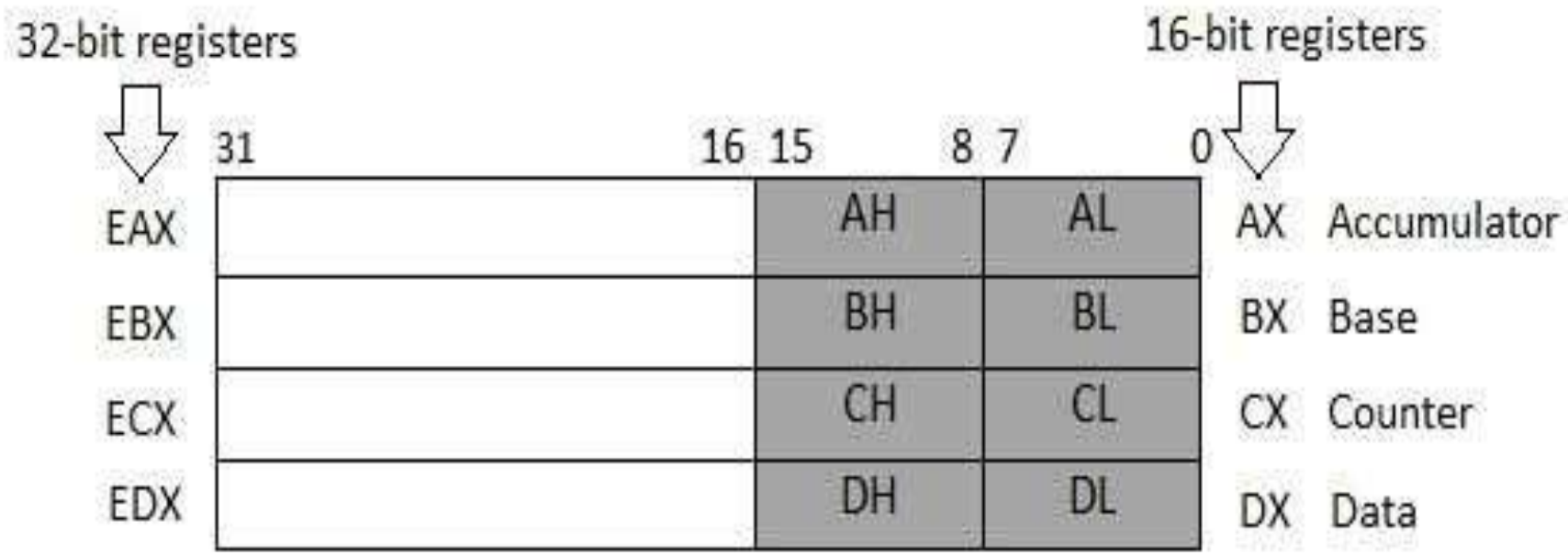
32-bit registers
16-bit registers
31
16 15
8 7
0
EAX
AH
AL
AX Accumulator
EBX
BH
BL
BX Base
ECX
CH
CL
CX Counter
EDX
DH
DL
DX Data

- Some of these data registers have specific use in arithmetical operations.
- **AX is the primary accumulator**; it is used in input/output and most arithmetic instructions. For example, in multiplication operation, one operand is stored in EAX or AX or AL register according to the size of the operand.
- **BX is known as the base register**, as it could be used in indexed addressing.
- **CX is known as the count register**, as the ECX, CX registers store the loop count in iterative operations.
- **DX is known as the data register**. It is also used in input/output operations. It is also used with AX register along with DX for multiply and divide operations involving large values.
-

Working of Registers:

- When we provide the system with input, that input is stored in registers, and when the system returns results after processing, those results are also drawn from the registers. so that the CPU can use them to process the data that the user provides.
- Registers are performed based on three operations:
- **Fetch:** The Fetch Operation is used to retrieve user-provided instructions that have been stored in the main memory. Registers are used to fetch these instructions.
- **Decode:** The Decode Operation is used to interpret the Instructions, which means that the CPU will determine which Operation has to be carried out on the Instructions after the Instructions have been decoded.
- **Execute:** The CPU manages the Execute Operation. The results that the CPU generates are then stored in the memory before being presented on the user screen.
- **Types of Registers:**
- Status and control registers.
- General-purpose data registers.
- Special purpose register.

- **Status and Control Register:**
- Status and Control registers report and allow modification of the state of the processor and of the program being executed.
- **General-Purpose Data Registers:**
- General purpose registers are extra registers that are present in the CPU and are utilized anytime data or a memory location is required. These registers are used for storing operands and pointers. These are mainly used for holding the following:
- Operands for logical and arithmetic operations
- Operands for address calculation
- Memory pointers
- There are 3 types of General-purpose data registers they are:

- **Data registers:** Data registers consists of four 32-bit data registers, which are used for arithmetic, logical and other operations. Data registers are again classified into 4 types they are:
- **AX:** This is known as the accumulator register. Its 16 bits are split into two 8-bit registers, AH and AL, allowing it to execute 8-bit instructions as well. In 8086 microprocessors, it is used in the arithmetic, logic, and data transfer instructions. One of the numbers involved in manipulation and division must be in AX or AL.
- **BX:** This is called a Base register. It has 16 bits and is split into two registers with 8 bits each, BH and BL. An address register is the BX register. It typically includes a data pointer for indirect addressing that is based, based indexed, or register-based.
- **CX:** This is known as the Count register. Its 16 bits are split into two 8-bit registers, CH and CL, allowing it to execute 8-bit instructions as well. This acts as a counter for loops. It facilitates the development of program loops. Shift/rotate instructions and string manipulation both allow the use of the count register as a counter.
- **DX:** This is known as the Data register. Its 16 bits are split into two 8-bit registers, DH and DL so that it can execute 8-bit instructions as well. In I/O operations, the data register can be used as a port number. It is also applied to division and multiplication.

- **Pointer registers:** The pointer registers consist of 16-bit left sections (SP, and BP) and 32-bit ESP and EBP registers.

along with

- **SP:** This is known as a Stack pointer used to point the program stack. For accessing the stack segment, it works with SS. It has a 16-bit size. It designates the item at the top of the stack. The stack pointer will be (FFFE)H if the stack is empty. The stack segment is relative to its offset address.
- **BP:** This is known as the Base pointer used to point data in the stack segments. We can utilize BP to access data in the other segments, unlike SP. It has a 16-bit size. It mostly serves as a way to access parameters given via the stack. The stack segment is relative to its offset address.

- **Index registers:** The 16-bit rightmost bits of the 32-bit ESI and EDI index registers. SI and DI are sometimes employed in addition and sometimes in subtraction as well as for indexed addressing.
- **SI:** This source index register is used to identify memory addresses in the data segment that DS is addressing. Therefore, it is simple to access successive memory locations when we increment the contents of SI. It has a 16-bit size. Relative to the data segment, it has an offset.
- **DI:** The function of this destination index register is identical to that of SI. String operations are a subclass of instructions that employ DI to access the memory addresses specified by ES. It is generally used as a Destination index for string operations.

Special Purpose Registers:

- To store machine state data and change state configuration, special purpose registers are employed. In other words, it is also defined as the CPU has a number of registers that are used to carry out instruction execution these registers are called special purpose registers. Special purpose registers are of 8 types they are cs, ds, ss, es, fs, and gs registers come under segment registers. These registers hold up to six segment selectors.
- **CS (Code Segment register):** A 16-bit register called a code segment (CS) holds the address of a 64 KB section together with CPU instructions. All accesses to instructions referred to by an instruction pointer (IP) register are made by the CPU using the CS segment. Direct changes to CS registration are not possible. When using the far jump, far call, and far return instructions, the CS register is automatically updated.
- **DS (Data Segment register):** A 64KB segment of program data is addressed using a 16-bit register called the data segment. The processor by default believes that the data segment contains all information referred to by the general registers (AX, BX, CX, and DX) and index registers (SI, DI). POP and LDS commands can be used to directly alter the DS register.

- **SS (Stack Segment register):** A 16-bit register called a stack segment holds the address of a 64KB segment with a software stack. The CPU by default believes that the stack segment contains all information referred to by the stack pointer (SP) and base pointer (BP) registers. POP instruction allows for direct modification of the SS register.
- **ES (Extra Segment register):** A 16-bit register called extra segment holds the address of a 64KB segment, typically holding program data. In string manipulation instructions, the CPU defaults to assuming that the DI register refers to the ES segment. POP and LES commands can be used to directly update the ES register.
- **FS (File Segment register):** FS registers don't have a purpose that is predetermined by the CPU; instead, the OS that runs them gives them a purpose. On Windows processes, FS is used to point to the thread information block (TIB).

- **GS (Graphics Segment register):** The GS register is used in Windows 64-bit to point to operating system-defined structures. OS kernels frequently use GS to access thread-specific memory. The GS register is employed by Windows to control thread-specific memory. In order to access CPU-specific memory, the Linux kernel employs GS. A pointer to a thread local storage, or TLS, is frequently used as GS.
- **IP (Instruction Pointer register):** The registers CS and IP are used by the 8086 to access instructions. The segment number of the following instruction is stored in the CS register, while the offset is stored in the IP register. Every time an instruction is executed, IP is modified to point to the upcoming instruction. The IP cannot be directly modified by an instruction, unlike other registers; an instruction may not have the IP as its operand.

- **Flag register:** The status register for an x86 CPU houses its current state, and it is called the FLAGS register. The flag bits' size and significance vary depending on the architecture. It often includes information about current CPU operation limitations as well as the outcome of mathematical operations. Some of these limitations might forbid the execution of a particular class of "privileged" instructions and stop some interrupts from triggering. Other status flags may override memory mapping and specify the response the CPU should have in the event of an arithmetic overrun.

RAM

Microcomputer Memory

- Memory is an essential component of the microcomputer system.
- It stores binary instructions and datum for the microcomputer.
- The memory is the place where the computer holds current programs and data that are in use.
- None technology is optimal in satisfying the memory requirements for a computer system.
- Computer memory exhibits perhaps the widest range of type, technology, organization, performance and cost of any feature of a computer system.
- The memory unit that communicates directly with the CPU is called main memory.
- Devices that provide backup storage are called auxiliary memory or secondary memory

Characteristics of memory systems

- The memory system can be characterized with their Location, Capacity, Unit of transfer, Access method, Performance, Physical type, Physical characteristics, Organization

Location :

- Processor memory: The memory like registers is included within the processor and termed as processor memory.

• Internal memory: It is often termed as main memory and resides within the CPU.

• External memory: It consists of peripheral storage devices such as disk and magnetic tape that are accessible to processor via i/o controllers..

Capacity

• Word size: Capacity is expressed in terms of words or bytes. — The natural unit of organization

• Number of words: Common word lengths are 8, 16, 32 bits etc. — or Bytes

Unit of Transfer

• Internal: For internal memory, the unit of transfer is equal to the number of data lines into and out of the memory module.

• External: For external memory, they are transferred in block which is larger than a word.

• Addressable unit

— Smallest location which can be uniquely addressed

— Word internally

— Cluster on Magnetic disks

Access Method

- Sequential access: In this access, it must start with beginning and read through a specific linear sequence. This means access time of data unit depends on position of records (unit of data) and previous location. — e.g. tape
- Direct Access: Individual blocks of records have unique address based on location. Access is accomplished by jumping (direct access) to general vicinity plus a sequential search to reach the final location. — e.g. disk
- Random access: The time to access a given location is independent of the sequence of prior accesses and is constant. Thus any location can be selected out randomly and directly addressed and accessed. — e.g. RAM
- Associative access: This is random access type of memory that enables one to make a comparison of desired bit locations within a word for a specified match, and to do this for all words simultaneously. — e.g. cache

Performance

- Access time: For random access memory, access time is the time it takes to perform a read or write operation i.e. time taken to address a memory plus to read / write from addressed memory location. Whereas for non-random access, it is the time needed to position read / write mechanism at desired location. — Time between presenting the address and getting the valid data
- Memory Cycle time: It is the total time that is required to store next memory access operation from the previous memory access operation. Memory cycle time = access time plus transient time (any additional time required before a second access can commence). — Time may be required for the memory to “recover” before next access — Cycle time is access + recovery
- Transfer Rate: This is the rate at which data can be transferred in and out of a memory unit. — Rate at which data can be moved — For random access, R = 1 / cycle time — For non-random access, Tn = Ta + N / R; where Tn – average time to read or write N bits, Ta – average access time, N – number of bits, R – Transfer rate in bits per second (bps).

Physical Types

- Semiconductor

— RAM

- Magnetic — Disk & Tape
- Optical — CD & DVD
- Others

— Bubble — Hologram

Physical Characteristics

- Decay: Information decays mean data loss.
- Volatility: Information decays when electrical power is switched off.
- Erasable: Erasable means permission to erase.
- Power consumption: how much power consumes?

Organization

- Physical arrangement of bits into words
- Not always obvious - e.g. interleaved

The Memory Hierarchy

- Capacity, cost and speed of different types of memory play a vital role while designing a memory system for computers.
- If the memory has larger capacity, more application will get space to run smoothly.
- It's better to have fastest memory as far as possible to achieve a greater performance. Moreover for the practical system, the cost should be reasonable.
- There is a tradeoff between these three characteristics cost, capacity and access time. One cannot achieve all these quantities in same memory module because
- If capacity increases, access time increases (slower) and due to which cost per bit decreases.
- If access time decreases (faster), capacity decreases and due to which cost per bit increases.
- The designer tries to increase capacity because cost per bit decreases and the more application program can be accommodated. But at the same time, access time increases and hence decreases the performance.

So the best idea will be to use memory hierarchy

- Memory Hierarchy is to obtain the highest possible access speed while minimizing the total cost of the memory system.
- Not all accumulated information is needed by the CPU at the same time.
- Therefore, it is more economical to use low-cost storage devices to serve as a backup for storing the information that is not currently used by CPU
- The memory unit that directly communicate with CPU is called the main memory
- Devices that provide backup storage are called auxiliary memory
- The memory hierarchy system consists of all storage devices employed in a computer system from the slow by high-capacity auxiliary memory to a relatively faster main memory, to an even smaller and faster cache memory

CONT…

- The main memory occupies a central position by being able to communicate directly with the CPU and with auxiliary memory devices through an I/O processor
- A special very-high-speed memory called cache is used to increase the speed of processing by making current programs and data available to the CPU at a rapid rate
- CPU logic is usually faster than main memory access time, with the result that processing speed is limited primarily by the speed of main memory
- The cache is used for storing segments of programs currently being executed in the CPU and temporary data frequently needed in the present calculations
- The memory hierarchy system consists of all storage devices employed in a computer system from slow but high capacity auxiliary memory to a relatively faster cache memory accessible to high speed processing logic. The figure below illustrates memory hierarchy.

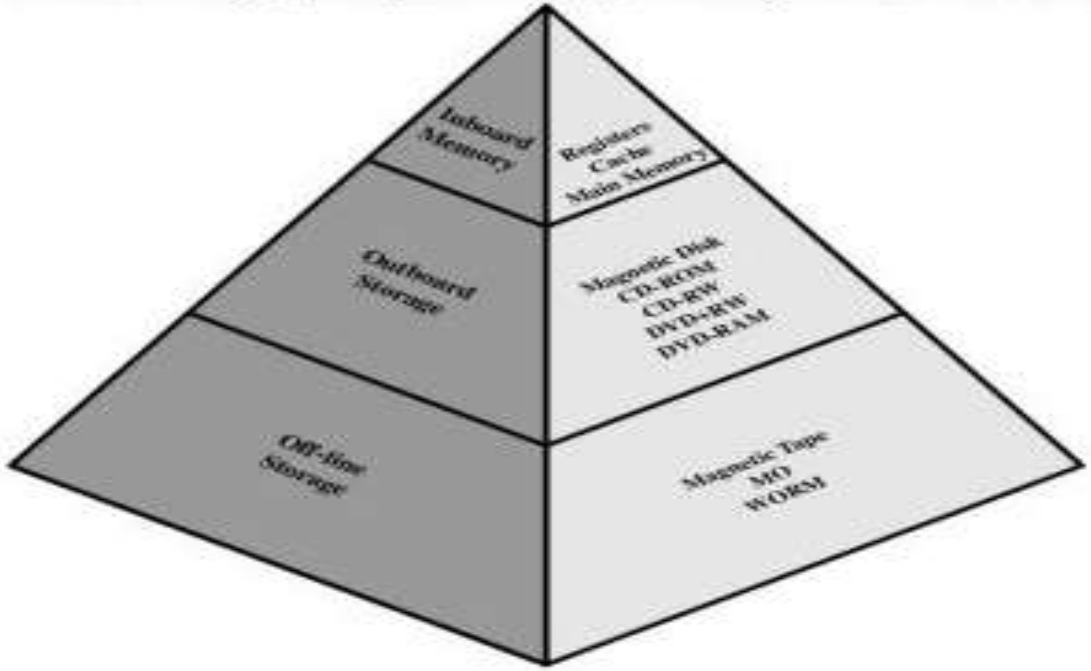

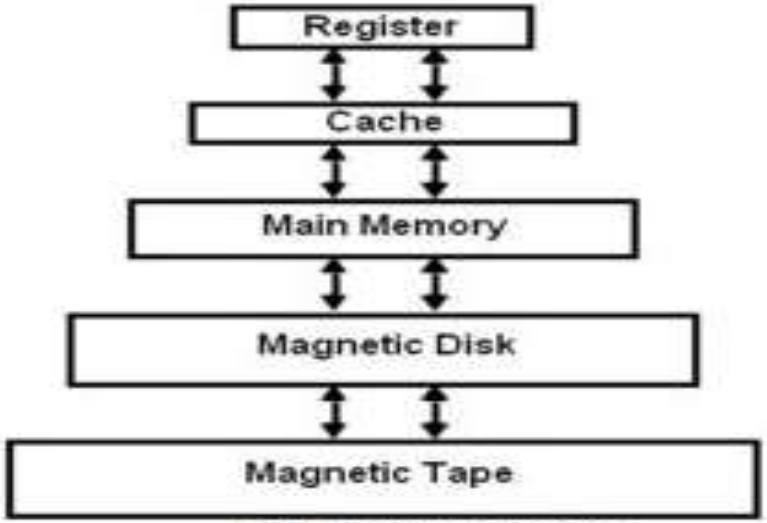

Fig: Memory Hierarchy

- **<u>As we go down in the hierarchy</u>**

- Cost per bit decreases
- Capacity of memory increases
- Access time increases
- Frequency of access of memory by processor also decreases.

- **<u>Hierarchy List</u>**

- Registers
- L1 Cache
- L2 Cache
- L3 Cache
- Main memory
- Disk cache
- Disk
- Optical
- Tape

Internal and External memory

- Internal or Main Memory

The main memory is the central unit of the computer system. It is relatively large and fast memory to store programs and data during the computer operation. These memories employ semiconductor integrated circuits. The basic element of the semiconductor memory is the memory cell.

The memory cell has three functional terminals which carries the electrical signal. o The select terminal: It selects the cell. o The data in terminal: It is used to input data as 0 or 1 and data out or sense terminal is used for the output of the cell's state. o The control terminal: It controls the function i.e. it indicates read and write

- Most of the main memory in a general purpose computer is made up of RAM integrated circuits chips, but a portion of the memory may be constructed with ROM chips

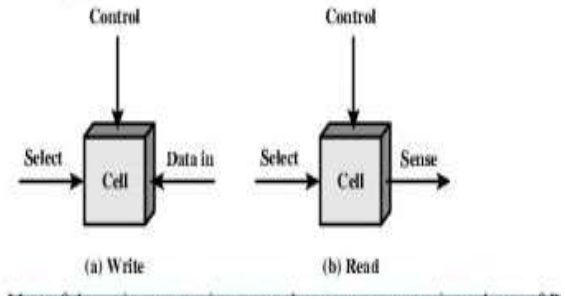

RAM– Random Access memory :
Memory cells can be accessed for information transfer from any desired random location. The process of locating a word in memory is the same and requires of locating a word in memory is the same and requires an equal amount of time no matter where the cells are located physically in memory thus named 'Random access'. Integrated RAM are available in two possible operating modes, Static and Dynamic

Static RAM (SRAM)

- The static RAM consists of flip flop that stores binary information and this stored information remains valid as long as power is applied to the unit. Fig: SRAM structure
- Four transistors T1, T2, T3 and t4 are cross connected in an arrangement that produces a stable logical state. In logic state 1, point C1 is high and point C2 is low. In this state, T1 & T4 are off and T2 & T3 are on.
- In logic state 0, point C1 is low and C2 is high. In this state, T1 & T4 are on and T2 & T3 are off. The address line controls the two transistors T5 & T6. When a signal is applied to this line, the two transistors are switched on allowing for read and write operation. For a write operation, the desired bit value is applied to line B while it's complement is applied to line B complement. This forces the four transistors T1, T2, T3 & T4 into a proper state.
- For the read operation, the bit value is read from line B.

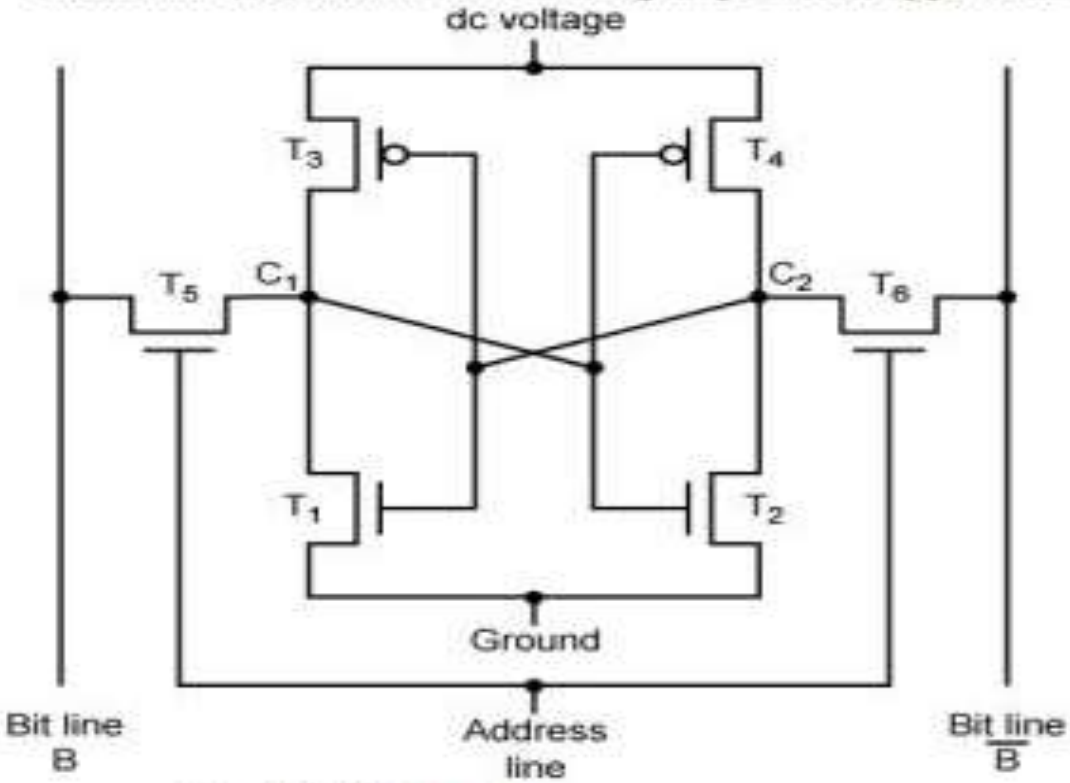

Fig: SRAM structure

Dynamic RAM (DRAM)

- The dynamic RAM stores the binary information in the form of electrical charges and capacitor is used for this purpose. Since charge stored in capacitor discharges with time, capacitor must be periodically recharged and which is also called refreshing memory. Fig: DRAM structure The address line is activated when the bit value from this cell is to be read or written. The transistor acts as switch that is closed i.e. allowed current to flow, if voltage is applied to the address line; and opened i.e. no current to flow, if no voltage is present in the address line.

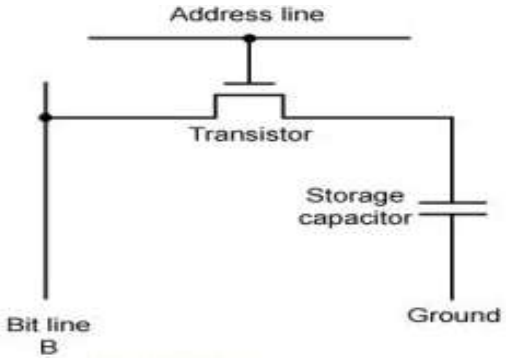

SRAM versus DRAM

- Both volatile
  - Power needed to preserve data

<u>Static RAM</u>

- Uses flip flop to store information
- Needs more space
- Faster, digital device
- Expensive, big in size
- Don't require refreshing circuit
- Used in cache memory

<u>Dynamic RAM</u>

- Uses capacitor to store information
- More dense i.e. more cells can be accommodated per unit area Slower, analog device
- Less expensive, small in size
- Needs refreshing circuit
- Used in main memory, larger memory units

INTRODUCING TECHNOLOGIES FOR HANDLING BIG DATA

Single Node Architecture

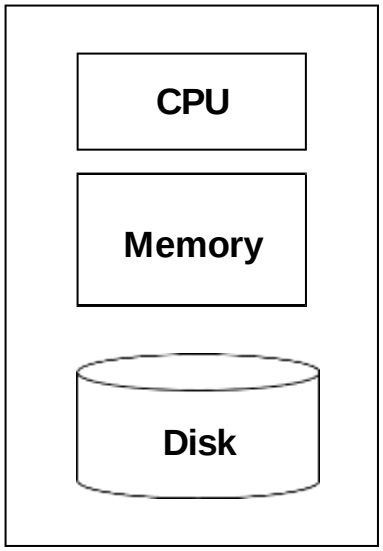

"Classical Architecture"

Motivation: Google Example

- 20+ billion web pages x 20KB = 400+ TB
- 1 computer reads 30-35 MB/sec from disk
  - ~4 to 8 months to read the web
- ~1,000 hard drives to store the web
- Takes even more to **do** something useful with the data!

Commodity Clusters Architecture

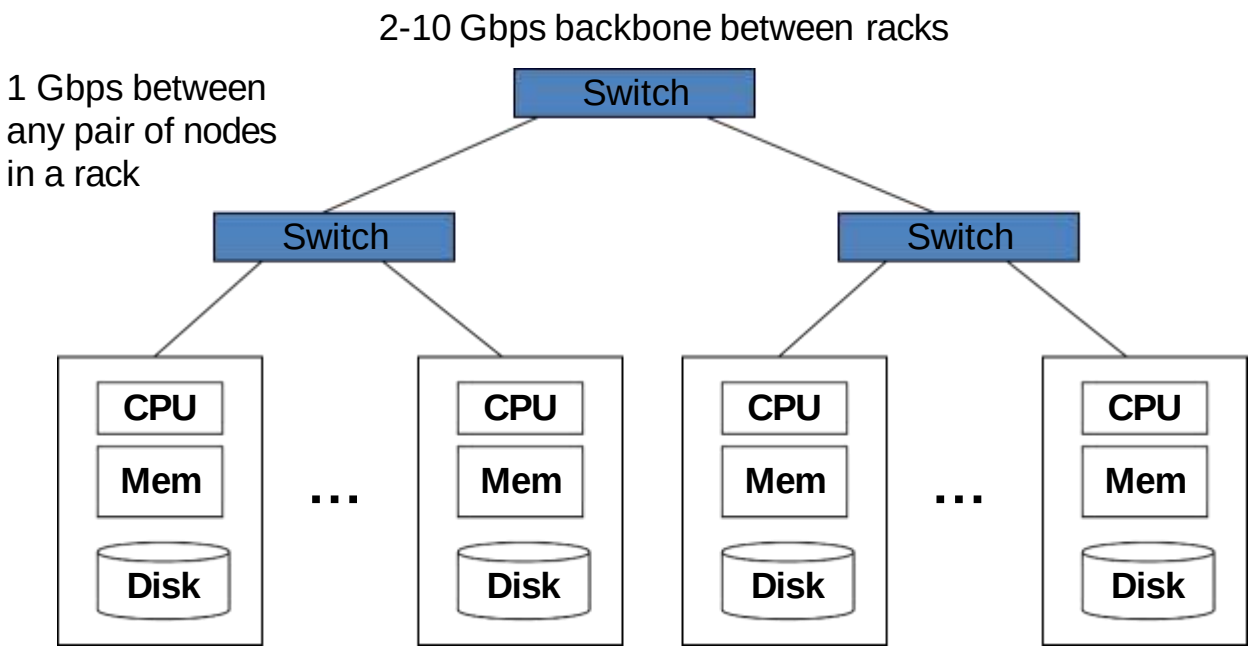

Commodity Clusters Challenges

- Massive datasets
  - Tens to hundreds of terabytes
  - Cannot mine on a single server
- Node Failures
- Persistent Datastore
- Network Bottleneck
- Distributed Programming is Hard
  - In order to solve this problem we have MAP REDUCE and other Big Data framework

In 2011 it was guest estimated that Google had 1M machines, http://bit.ly/Shh0RO

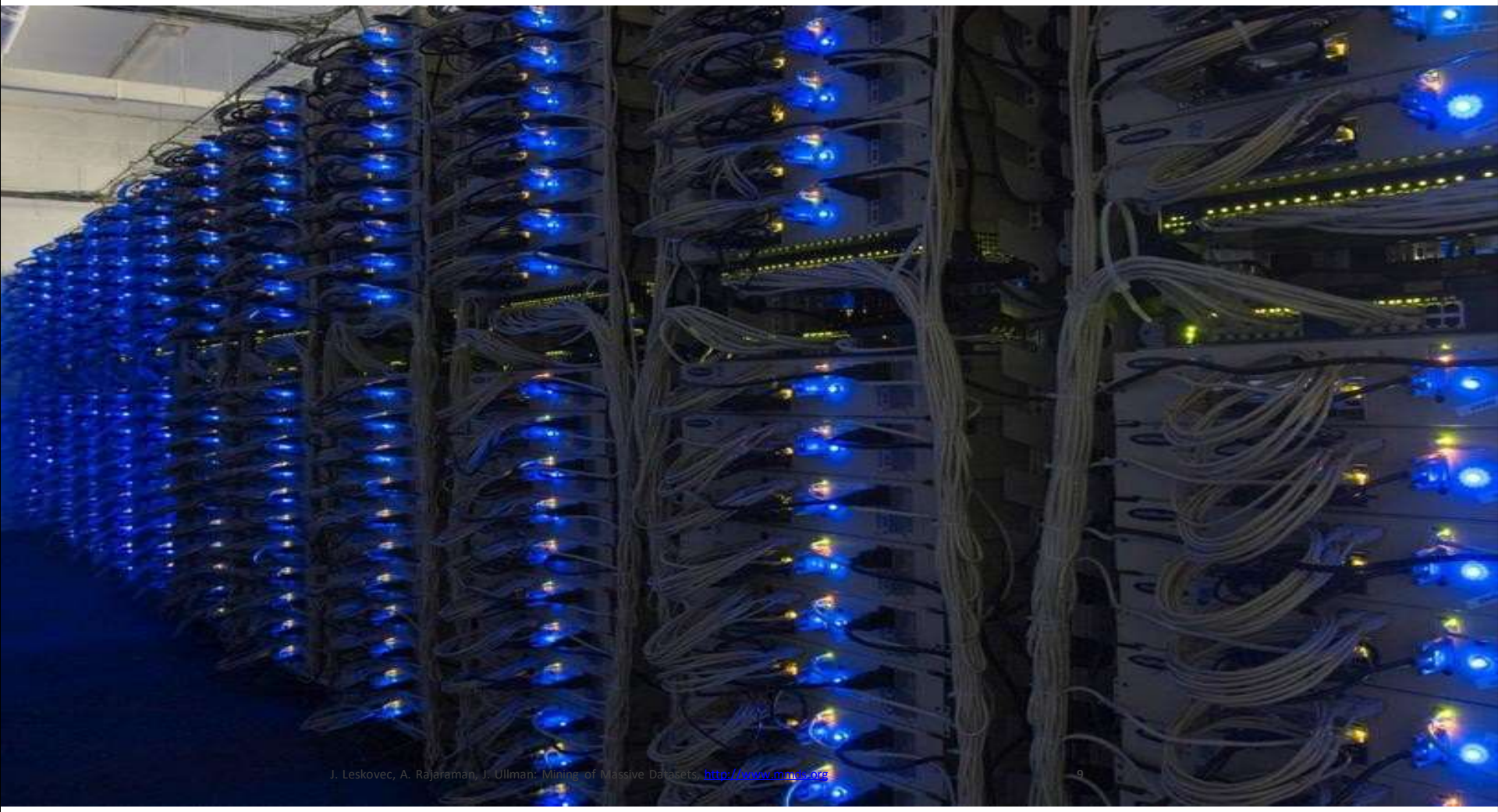

History Of High Performance Computing

- 1980’s Parallel Computing.
- 1990’s DCS.

PARALLEL COMPUTING

- These were **shared memory** multiprocessors, with multiple processors working side-by-side on shared data.
- In the mid 1980's, a new kind of parallel computing was launched when the Caltech Concurrent Computation project built a supercomputer for scientific applications from 64 Intel 8086/8087 processors

PARALLEL COMPUTING FOR BIG DATA

Parallel Computing

- Also improves the processing capability of a computer system by adding additional computational resources to it.
- Divide complex computations into subtasks, handled individually by processing units, running in parallel.

Concept – processing capability will increase with the increase in the level of parallelism.

Parallel Computing Architecture

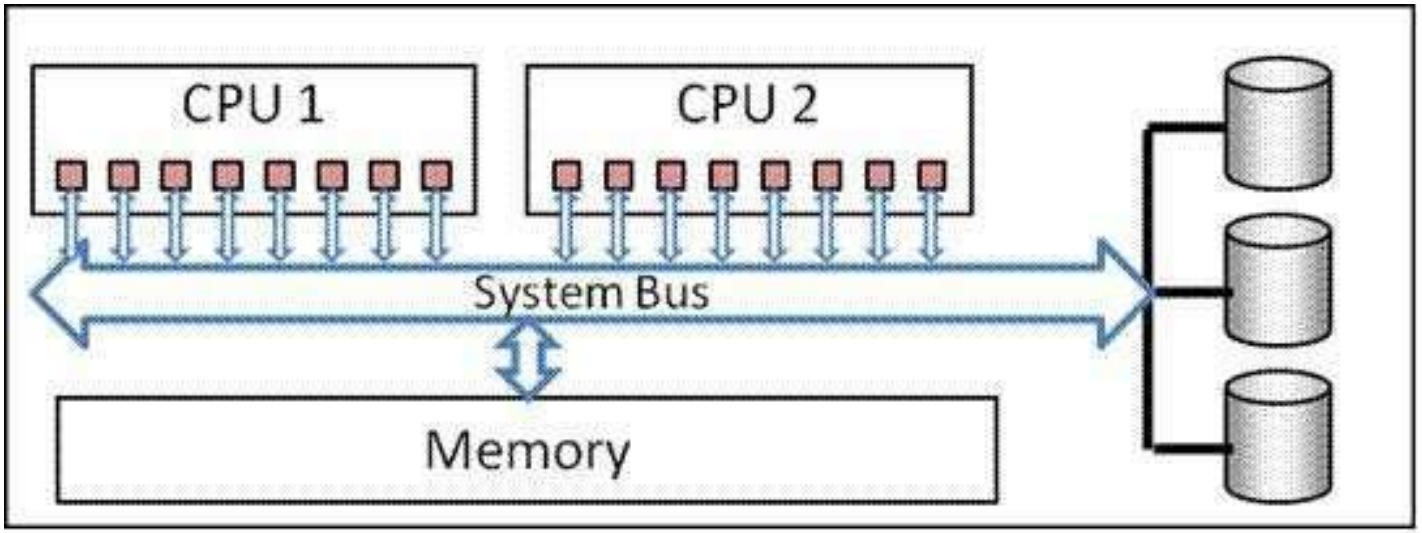

Distributed Computing

- Distributed Computing (Cluster/Grid).
- Starting in the late 80’s, **clusters** came into market.
- A cluster is a type of parallel computer built from large numbers of off-the-shelf computers connected by an off-the-shelf network.
- Today, clusters are the workhorse of scientific computing and are the dominant architecture in the data centers that power the modern information age.

DISTRIBUTED COMPUTING FOR BIG DATA

Multiple computing resources are connected in a network and computing tasks are distributed across these resources.

- Increases the Speed
- Increases the Efficiency

more suitable to process huge amount of data in a limited time

DISTRIBUTED COMPUTING

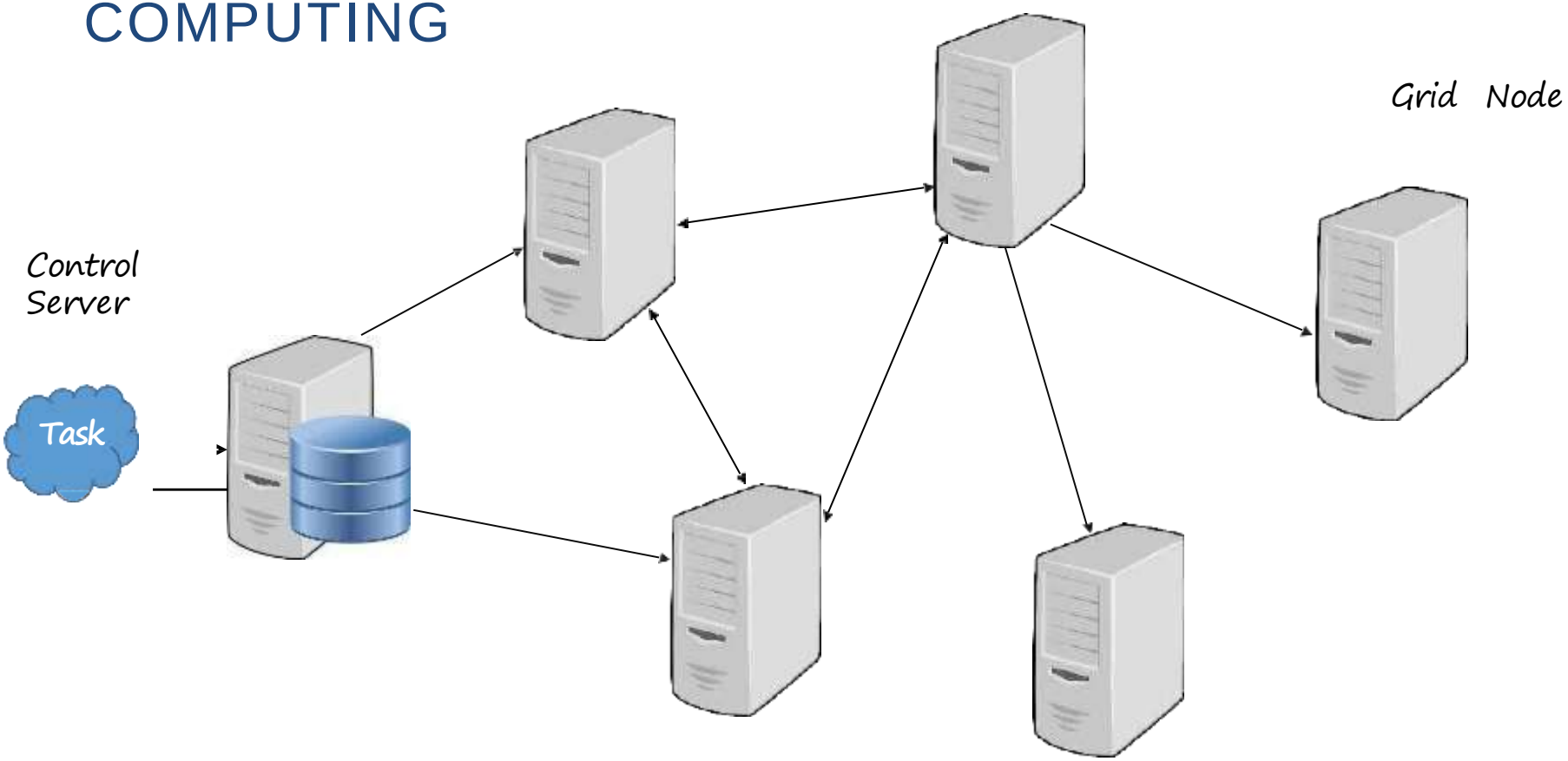

Architecture

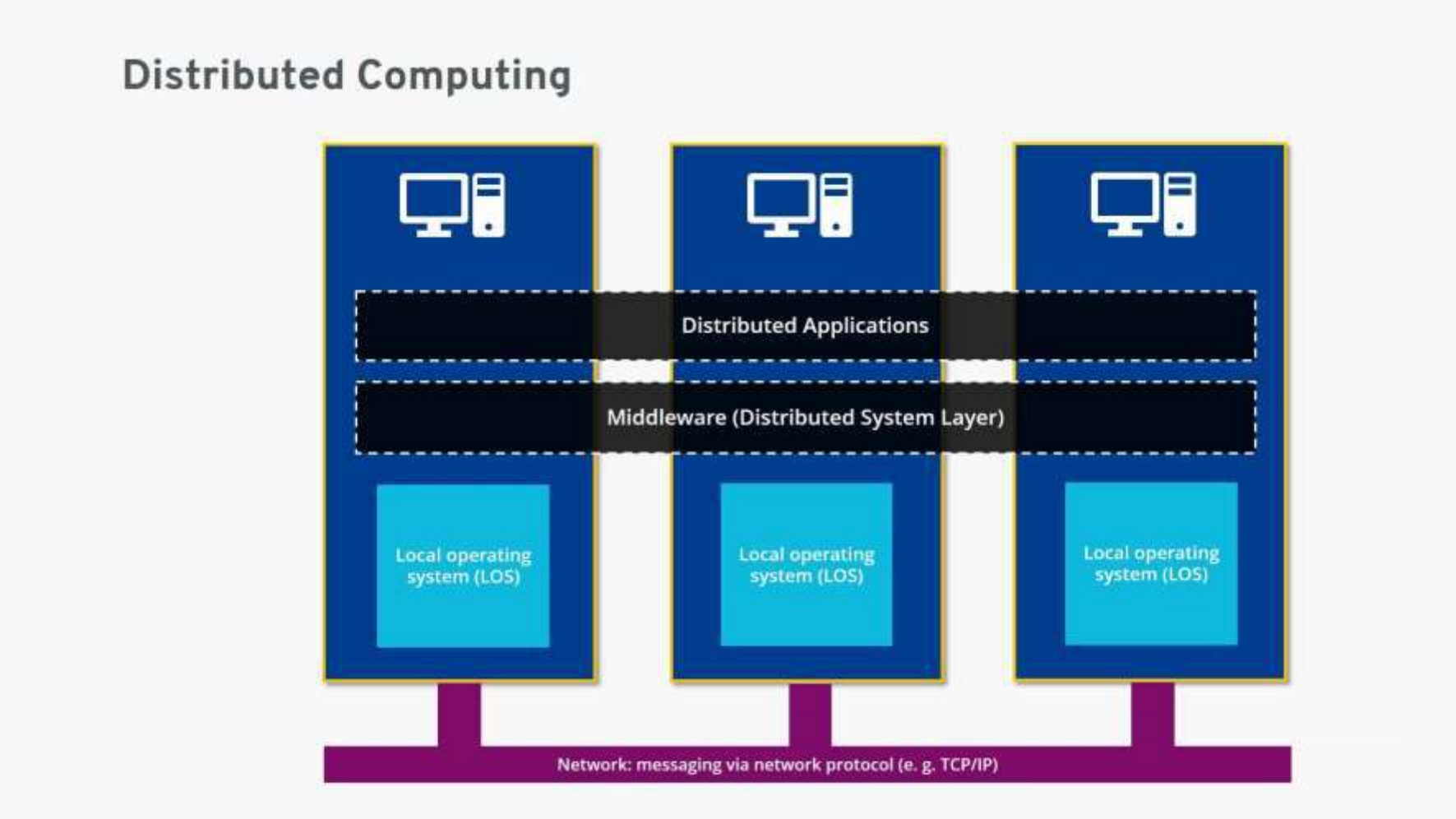

DISTRIBUTED COMPUTING TECHNIQUE FOR PROCESSING LARGE DATA

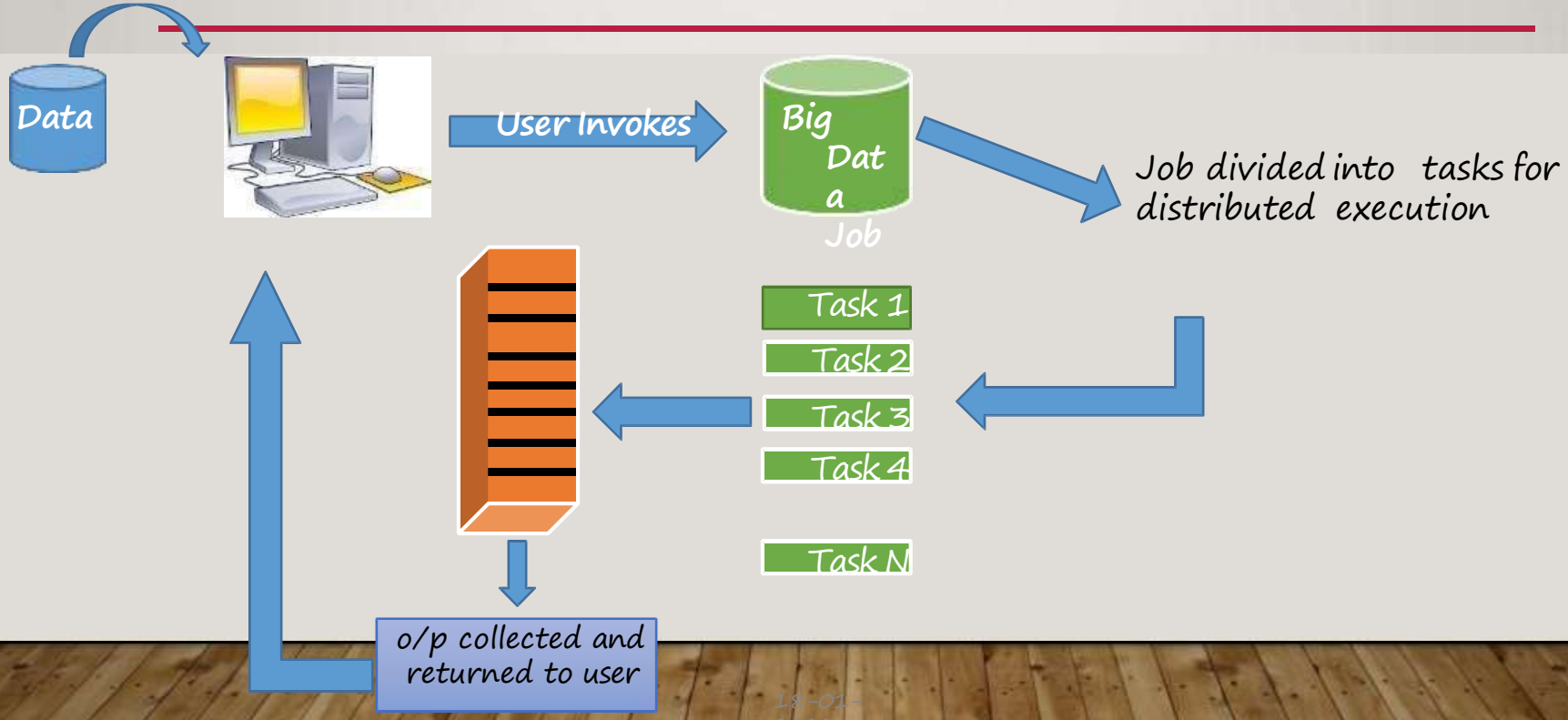

ISSUES IN THE SYSTEM

- ✓ Latency : can be defined as the aggregate delay in the s/m bcoz of delays in the completion of individual tasks.

- ✓ System delay

Also affects data management and communication

Affecting the productivity & profitability of an organization.

Massively Parallel Processing

- MPP (massively parallel processing) is the coordinated processing of a program by multiple processor that work on different parts of the program, with each processor using its own operating system and memory .

- Typically, MPP processors communicate using some messaging interface. In some implementations, up to 200 or more processors can work on the same application.

- An "interconnect" arrangement of data paths allows messages to be sent between processors.

- Typically, the setup for MPP is more complicated, requiring thought about how to partition a common database among processors and how to assign work among the processors.

- An MPP system is also known as a "loosely coupled" or "shared nothing" system.

Architecture

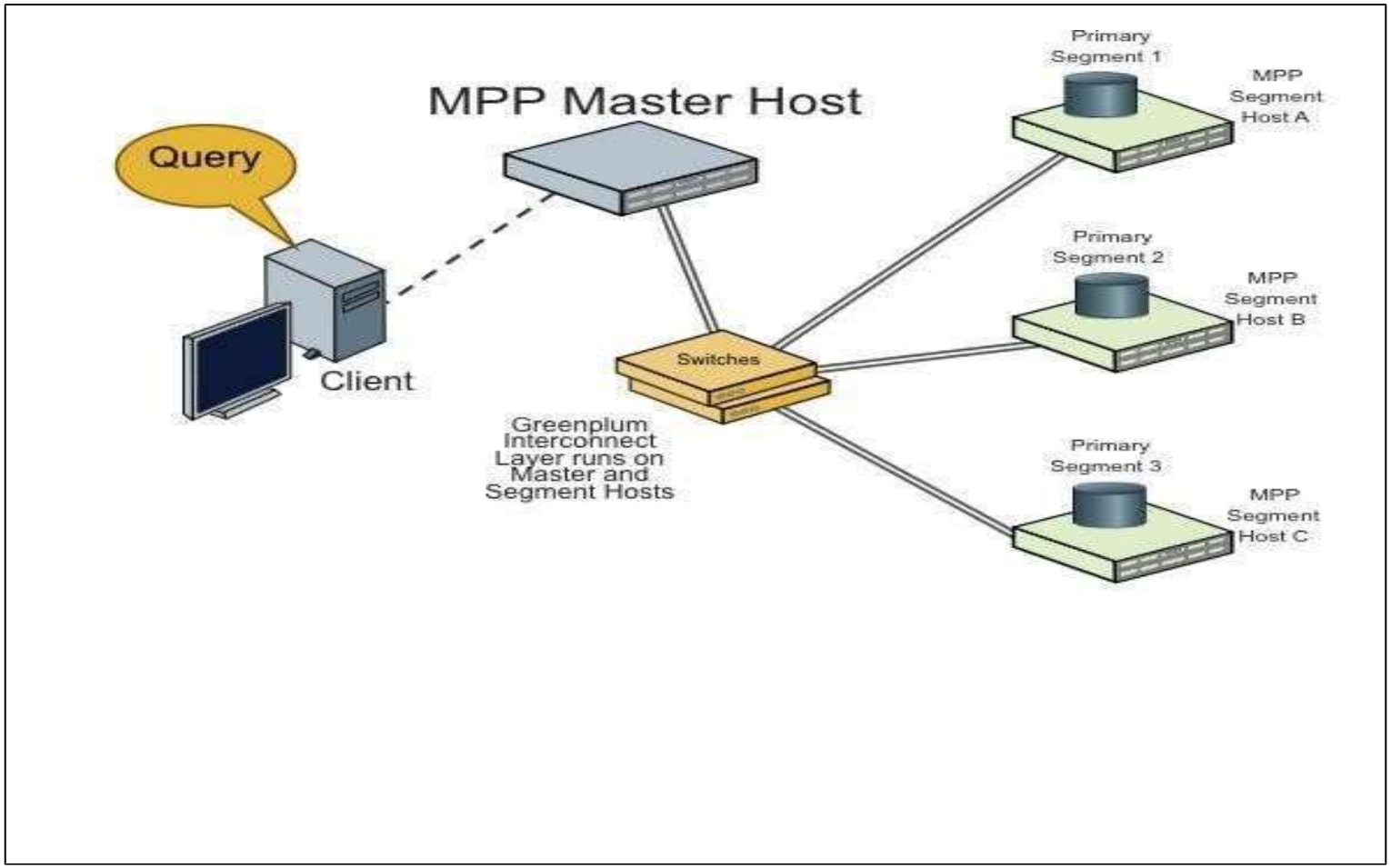

CPU vs GPU

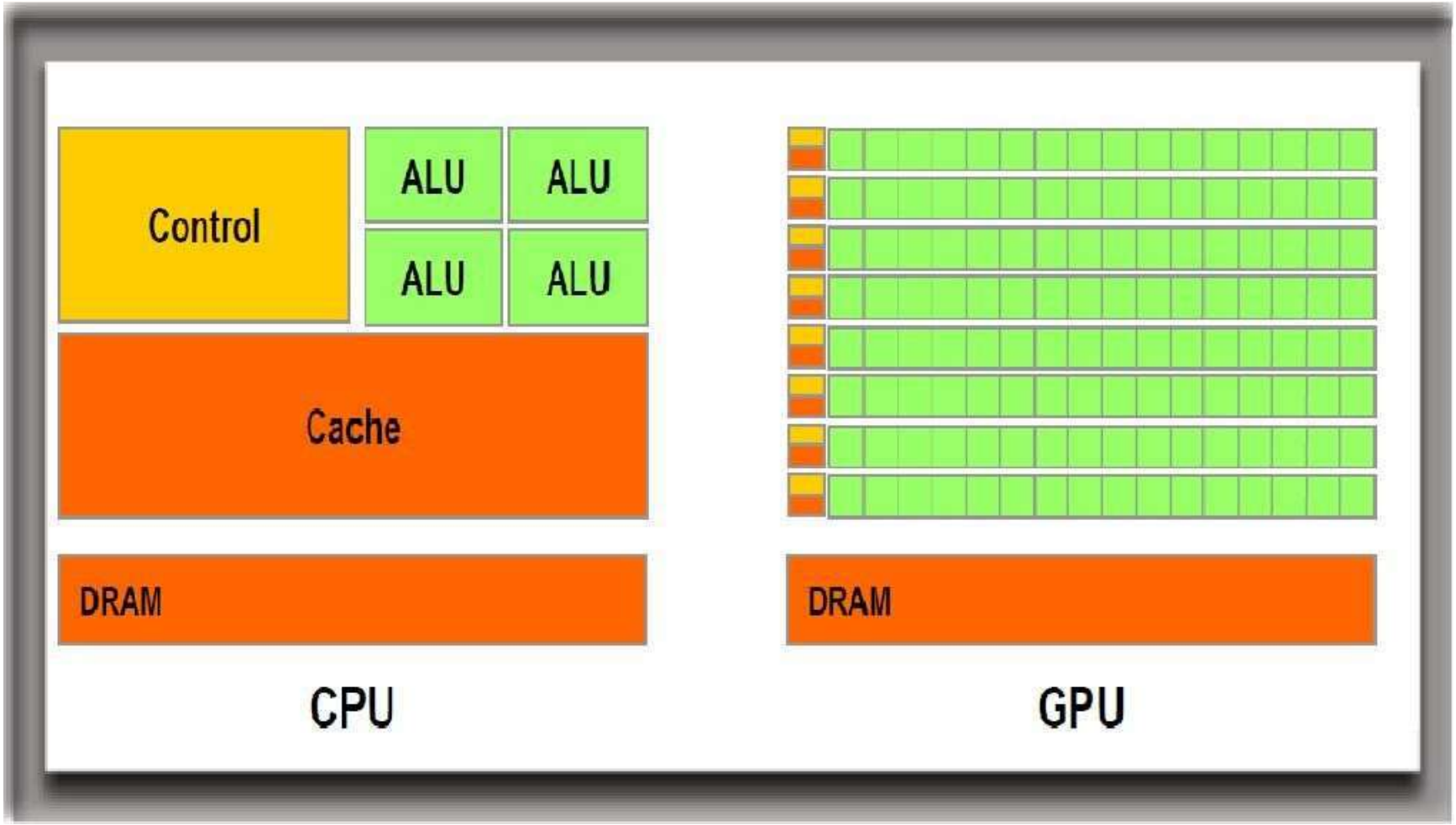

GPU's BENCHMARKS

GPU	Cuda Cores/ Stream Processors	3D Mark Graphics Score
Nvidia GeForce RTX 3090	10496	19970
AMD Radeon 6900XT	5120	19167
Nvidia GeForce RTX 3080	8704	17699
AMD Radeon 6800	3840	15217
Nvidia GeForce RTX 3070	5888	13722
AMD Radeon 6700XT	2560	11986
Nvidia GeForce RTX 3060 Ti	4864	11833

In-memory Computation

- In-memory computation works by eliminating all slow data accesses and relying exclusively on data stored in RAM.
- Overall computation performance is greatly improved by removing the latency commonly seen when accessing hard disk drives or SSDs.
- Software running on one or more computers manages the computation as well as the data in memory, and in the case of multiple computers, the software divides the computation into smaller tasks which are distributed out to each computer to run in parallel. In-memory computation is often done in the technology known as **in-memory data grids** (IMDG).

IN MEMORY COMPUTING TECHNOLOGY

- Another way to improve speed and processing power of data.
- IMC is used to facilitate high speed data processing e.g. IMC can help in tracking and monitoring the consumers activities and behaviours which allow organizations to take timely actions for improving customer services and hence customer satisfaction.
- Data stored on external devices known as secondary storage space. This data had to be accessed from external source.
- In the IMC technology the RAM or Primary storage space is used for analysing data. Ram helps helps to increase computing speed.
- Also reduction in cost of primary memory has helped to store data in primary memory.

Architecture

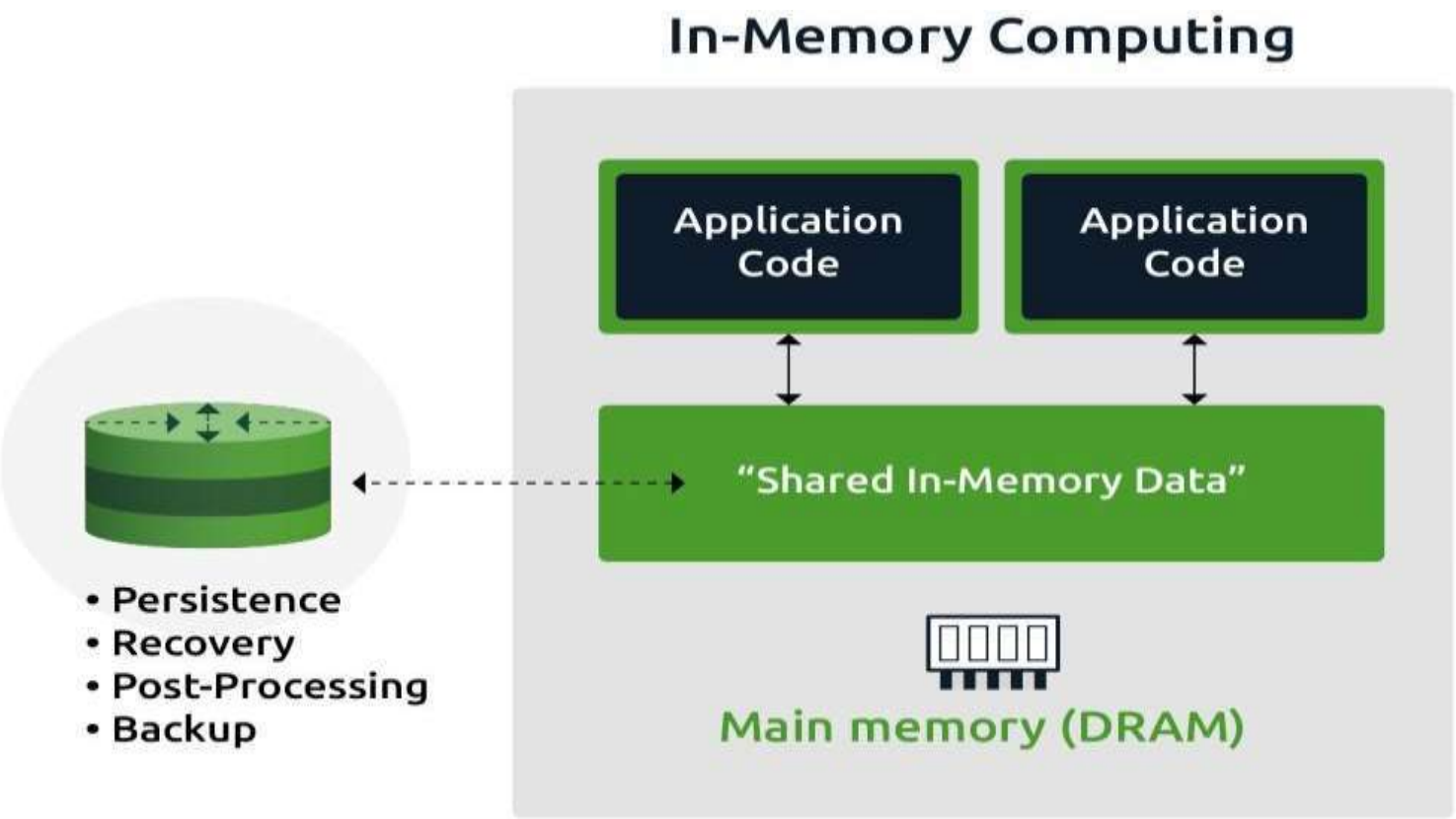

MERITS OF THE HIGH PERFORMANCE COMPUTING ARCHITECTURE

- **Scalability**
- **Virtualization**
- **Load Balancing Features**
- **Optimization**

PROBLEMS OF THE HIGH PERFORMANCE COMPUTING SYSTEM

Large-scale Computing

- **Large-scale computing** problems on **commodity hardware**
- **Challenges:**
  - **How do you distribute computation?**
  - **How can we make it easy to write distributed programs?**
  - **Machines fail:**
    - One server may stay up 3 years (1,000 days)
    - If you have 1,000 servers, expect to loose 1/day
    - People estimated Google had ~1M machines in 2011
    - 1,000 machines fail every day!

Storage Infrastructure

- **Problem:**
  - If nodes fail, how to store data persistently?
- **Answer:**
  - **Distributed File System:**
    - Provides global file namespace
    - Google GFS; Hadoop HDFS;
- **Typical usage pattern**
  - Huge files (100s of GB to TB)
  - Data is rarely updated in place
  - Reads and appends are common

CLOUD COMPUTING AND BIG DATA

Cloud Computing is the delivery of computing services, storage, databases, networking, software, analytics and more—over the Internet (“the cloud”).

Companies offering these computing services are called cloud providers and typically charge for cloud computing services based on usage, similar to how you are billed for water or electricity at home.

CLOUD COMPUTING AND BIG DATA

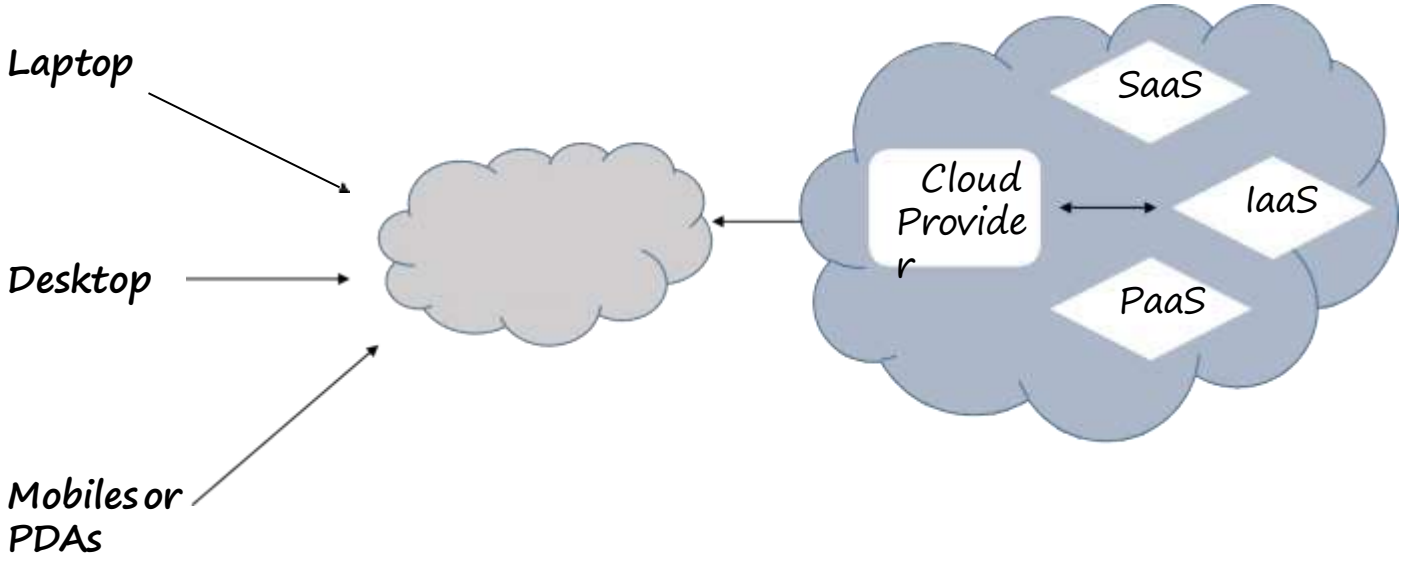

FEATURES OF CLOUD COMPUTING

Scalability addition of new resources to an existing infrastructure.

- **Problem :** increase in the amount of data , requires organization to improve h/ w components. The new h/ w may not provide complete support to the s/w, that used to run properly on the earlier set of h/w.
- **Solution :** to this problem is using cloud services that employ the distributed computing technique to provide scalability.

FEATURES OF CLOUD COMPUTING

- **Elasticity** – Hiring certain resources, as and when required, and paying for those resources no extra payment is required for acquiring specific cloud services. A cloud does not require customers to declare their resource requirements in advance.

- **Resource Pooling** -multiple organizations, which use similar kinds of resources to carry out computing practices, have no need to individually hire all the resources.

FEATURES OF CLOUD COMPUTING

- **Self Service** – cloud computing involves a simple user interface that helps customers to directly access the cloud services they want.

- **Low Cost** – cloud offers customized solutions, especially to organizations that cannot afford too much initial investment.

  cloud provides pay-us-you-use option, in which organizations need to s ign for those resources only that are essential.

- **Fault Tolerance** – offering uninterrupted services to customers

CLOUD DEPLOYMENT MODELS

- Depending upon the architecture used in forming the n/w, services and applications used, and the target consumers, cloud services form various deployment models. They are,

  - Public Cloud
  - Private Cloud
  - Community Cloud
  - Hybrid Cloud

Public Cloud (End-User Level Cloud)

- Owned and managed by a company than the one using it.
- Third party administrator.
- Eg : Verizon, Amazon Web Services, and Rackspace.
- The workload is categorized on the basis of service category, h/w customization is possible to provide optimized performance.
- The process of computing becomes very flexible and scalable through customized h/w resources.
- The primary concern with a public cloud include security and latency.

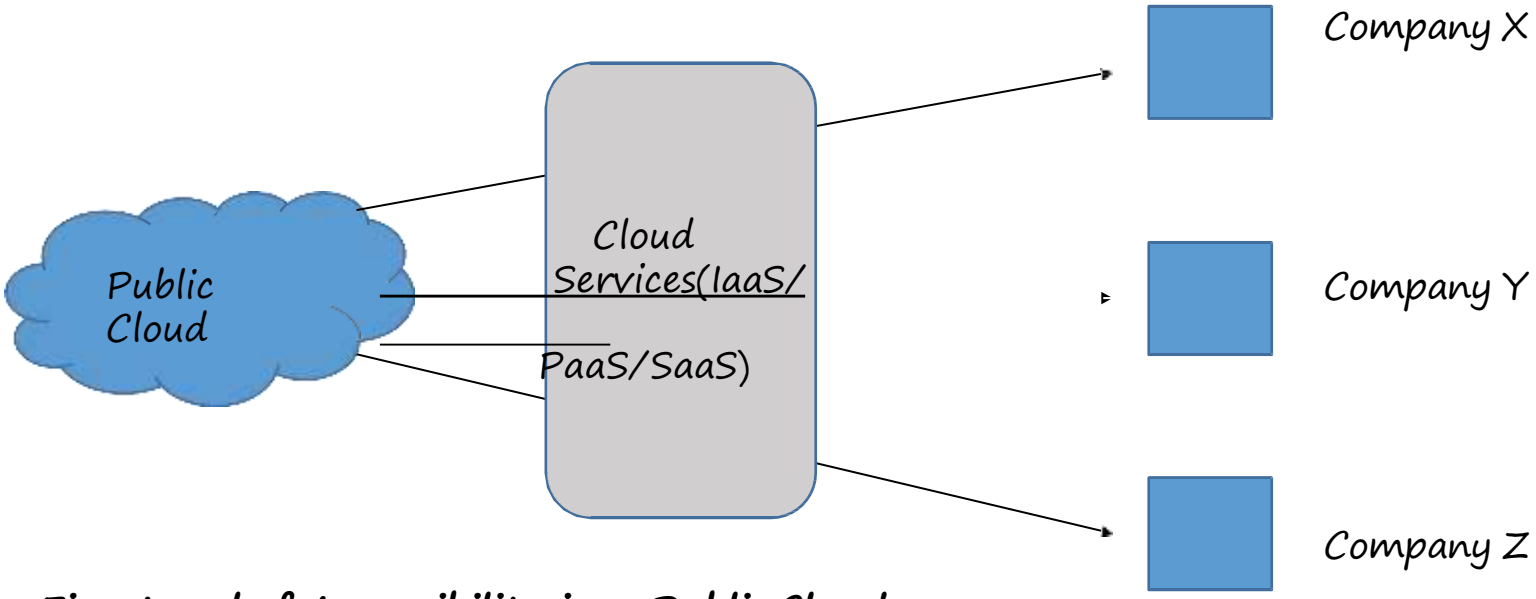

Fig : Level of Accessibility in a Public Cloud

- **Private Cloud (Enterprise Level Cloud)**

- Remains entirely in the ownership of the organization using it.
- Infrastructure is solely designed for a single organization.
- Can automate several processes and operations that require manual handling in a public cloud.
- Can also provide firewall protection to the cloud, solving latency and security concerns.
- A private cloud can be either on-premises or hosted externally.

  on premises : service is exclusively used and hosted by a single organization.

  hosted externally : used by a single organization and are not shared with other organizations.

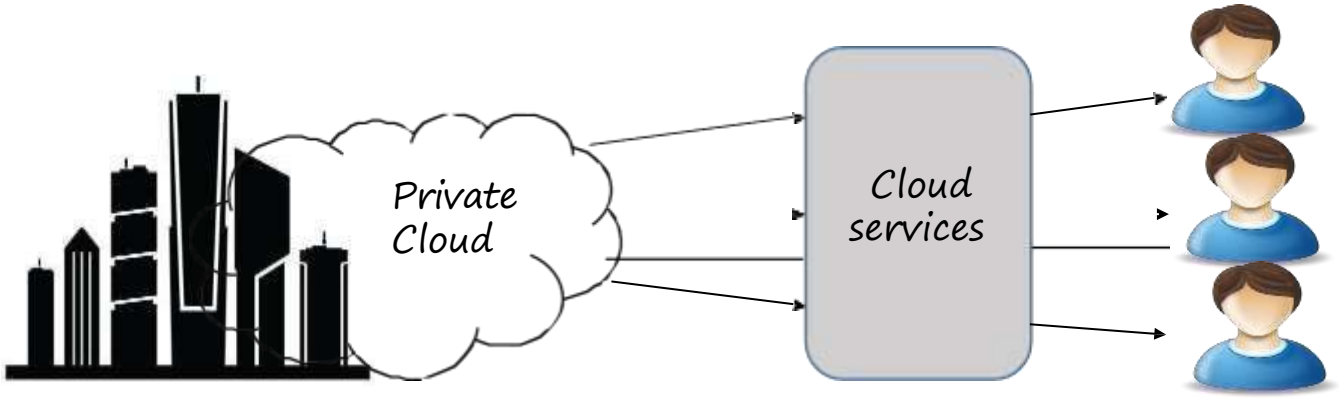

Fig: Level of Accessibility in a Private Cloud

Community ClouD

Type of cloud that is shared among various organizations with a common tie.

-Managed by third party cloud services.

-Available on or off premises.

Eg. In any state, the community cloud can provided so that almost all govt. organizations of that state can share the resources available on the cloud. Because of the sharing of resources on community cloud, the data of all citizens of that state can be easily managed by the govt. organizations.

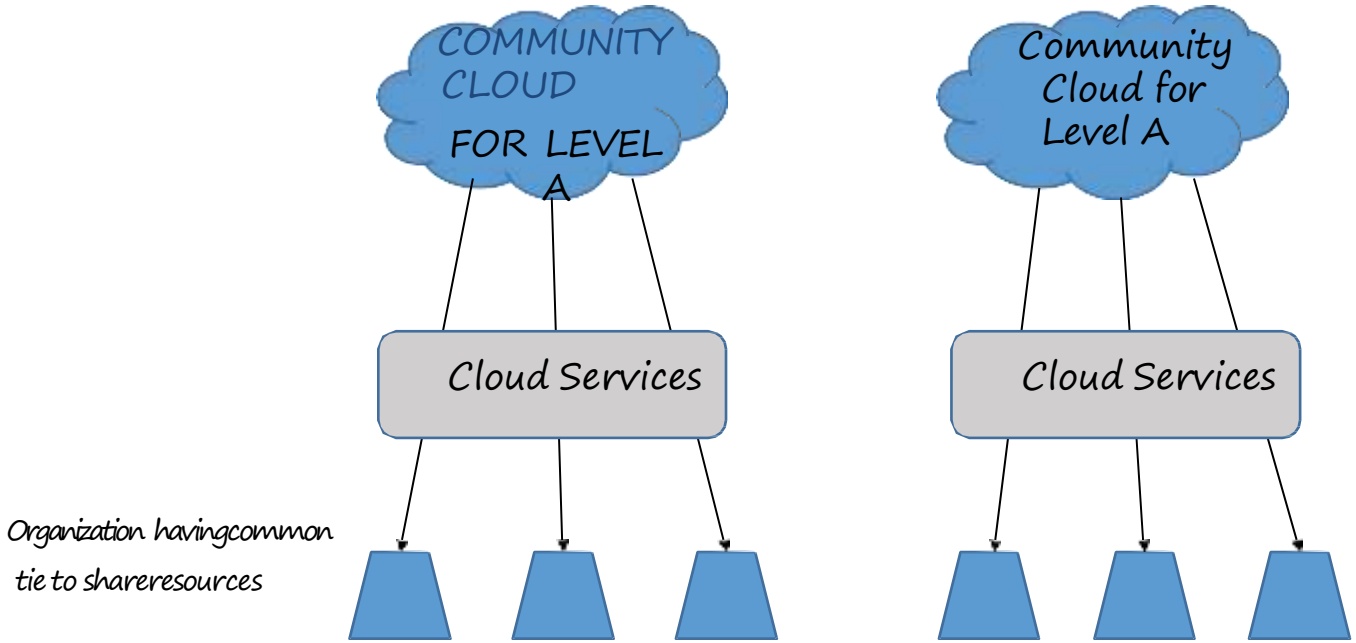

Fig : Level of Accessibility in Community Clouds

Hybrid Cloud

-Various internal or external service providers offer services to many organizations.

-In hybrid clouds, an organization can use both types of cloud, e. public and private together – situations such as cloud bursting.

- Organization uses its own computing infrastructure, high load requirement, access clouds.

The organization using the hybrid cloud can manage an internal private cloud for general use and migrate the entire or part of an application to the public cloud during the peak periods.

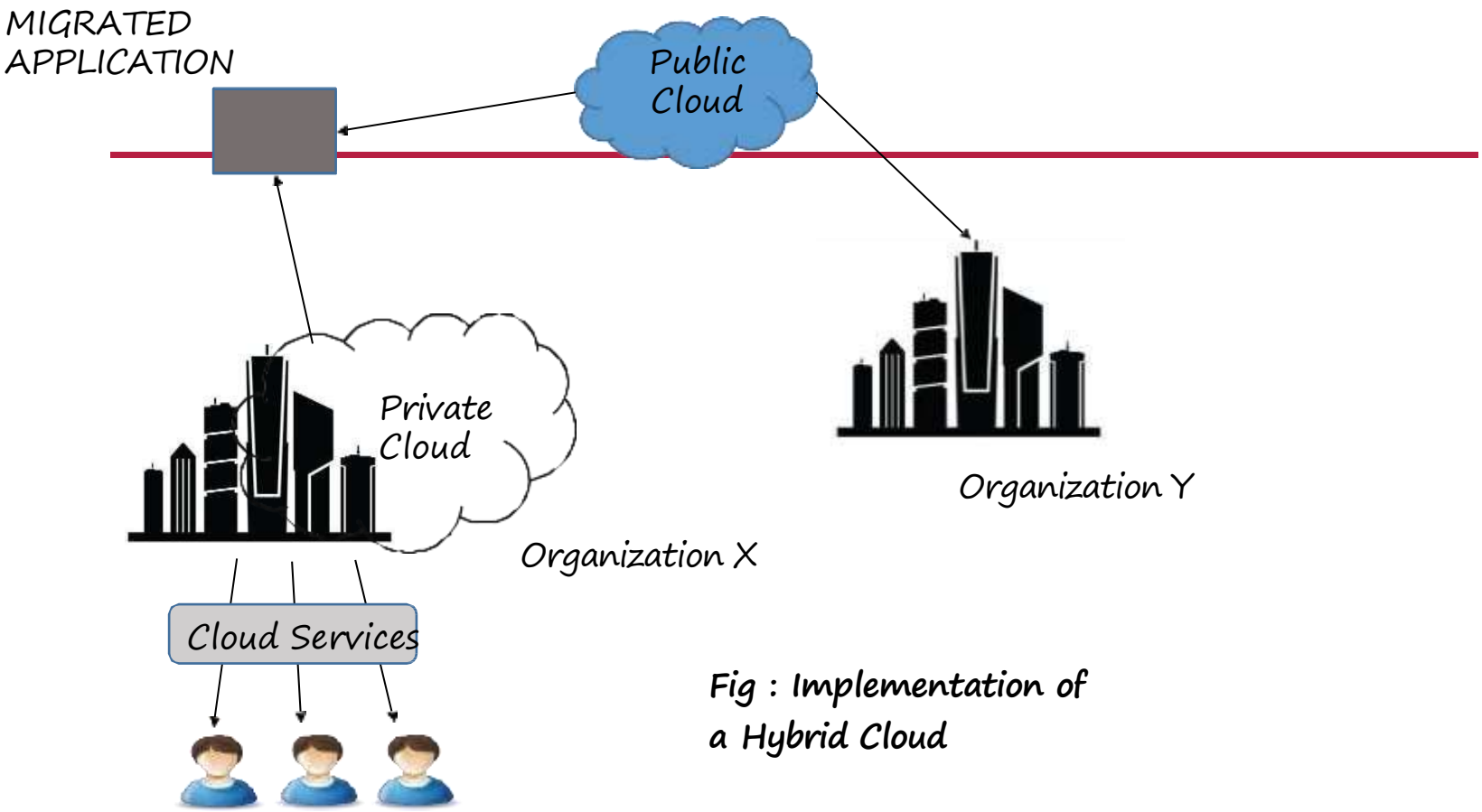

Fig : Implementation of a Hybrid Cloud

CLOUD SERVICES FOR BIG DATA

- In big data IaaS, PaaS and SaaS clouds are used in following manner.
- IaaS:- Huge storage and computational power requirement for big data are fulfilled by limitless storage space and computing ability obtained by IaaS cloud.
- PaaS :- offerings of various vendors have stared adding various popular big data platforms that include mapreduce, Hadoop. These offerings save organizations from a lot of hassels which occur in managing individual hardware components and software applications.
- SaaS :- Various organisation require identifying and analyzing the voice of customers particularly on social media. Social media data and platform are provided by SaaS vendors. In addition, private cloud facilitates access to enterprise data which enable these analyses.

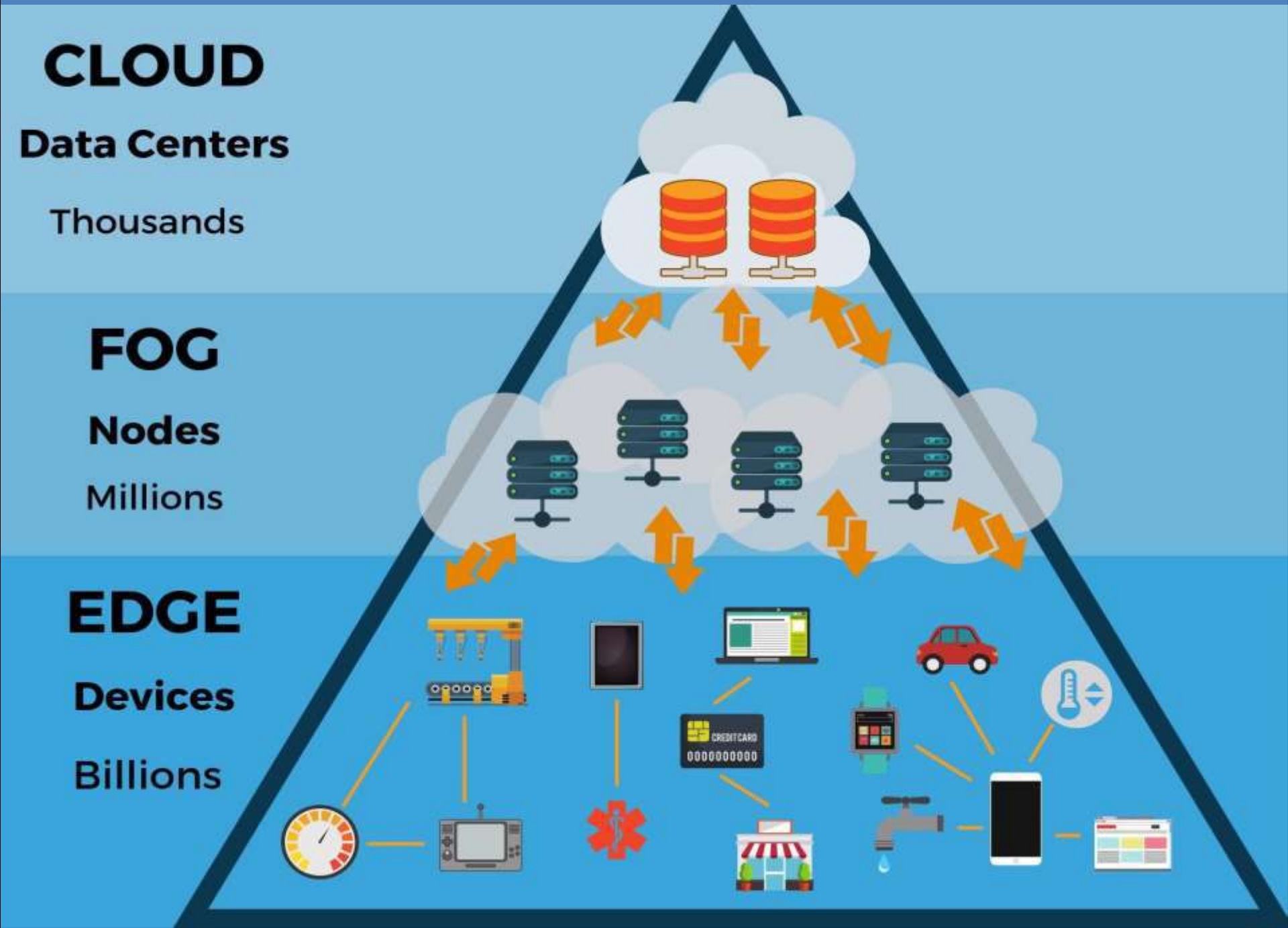
CLOUD
Data Centers
Thousands
FOG
Nodes
Millions
EDGE
Devices
Billions
CREDITCARD
0000000000

Why Edge & Fog Computing

- The Internet of Things (IoT) is driving business transformation by connecting everyday objects and devices to one another and to cloud-hosted services.
- Current deployment models emphasize mandatory cloud connectivity; These are two of the primary issues with connecting edge devices to the cloud for all services:
- Connected devices are creating data at an exponentially growing rate, which will drive performance and network congestion challenges at the edge of infrastructure.
- There are performance, security, bandwidth, reliability, and many other concerns that make cloud-only solutions impractical for many use cases.

Edge Computing

- Edge computing is a modern computing paradigm that functions at the edge of the network. It allows client data to be processed closer to the data source instead of far-off centralized locations such as huge cloud data centers.

- Edge computing takes data storage, enterprise applications, and computing resources closer to where the user physically consumes the information.

- This allows for efficient data processing as large amounts of data can be processed near the source itself, thereby reducing internet bandwidth, eliminating costs and allowing applications to be used in remote locations. This also helps in security as there is not interaction with any public cloud.

Edge Computing

- Edge devices can be laptops, sensors, smartphones, gateways, etc.
- Autonomous vehicles, Internet of Things, Software as Service, Voice Assistants, Predictive maintenance machines or services, Traffic Management, etc. All of these need real time data processing and reduced latency.

- In any use cases that have to do with latency-sensitive processing of information, Edge computing would be the best solution because data does not have to traverse over a network to a data center or cloud for processing.

"As the Internet of Things evolves, the rise of edge computing becomes inevitable. We need to start thinking how does edge computing fit our digital strategy and start building the implementation roadmap. Its time for a strategic consultation! "

Fog Computing

- Fog computing is between the Edge and the cloud, it can take data from the Edge before it reaches the cloud. The data taken in at the fog is then classified as to what is relevant and what is not.

- After this, the relevant data remains in the cloud for storage, and the rest of the unimportant data gets deleted or remains in a fog node for remote access.

- Fog computing allows backup infrastructure to be located closer to the data source, minimizing data transfer latency and improving backup and restore speeds. This is particularly beneficial for organizations with large amounts of data or time-sensitive applications.

- By performing data deduplication, compression, and pre-processing at the fog layer, only relevant and unique data needs to be transmitted to the central backup repository or cloud. This reduces the amount of data transferred over the network, optimizing bandwidth usage and minimizing costs.

Fog Computing

Fog computing is a computing architecture in which a series of nodes receives data from IoT devices in real time. These nodes perform real-time processing of the data that they receive, with millisecond response time. The nodes periodically send analytical summary information to the cloud.

"Fog computing has emerged as a technology trend that is complementary to cloud computing, and for the IoT, both fog and cloud are necessary. Machines generate tremendous amounts of data and (the) vast majority of this data is extremely ephemeral, which can be examined and dropped. The fog is necessary as the first layer of quick response to the very fast-moving information. The cloud is the repository to which the fog layer pushes data for post-facto analysis."

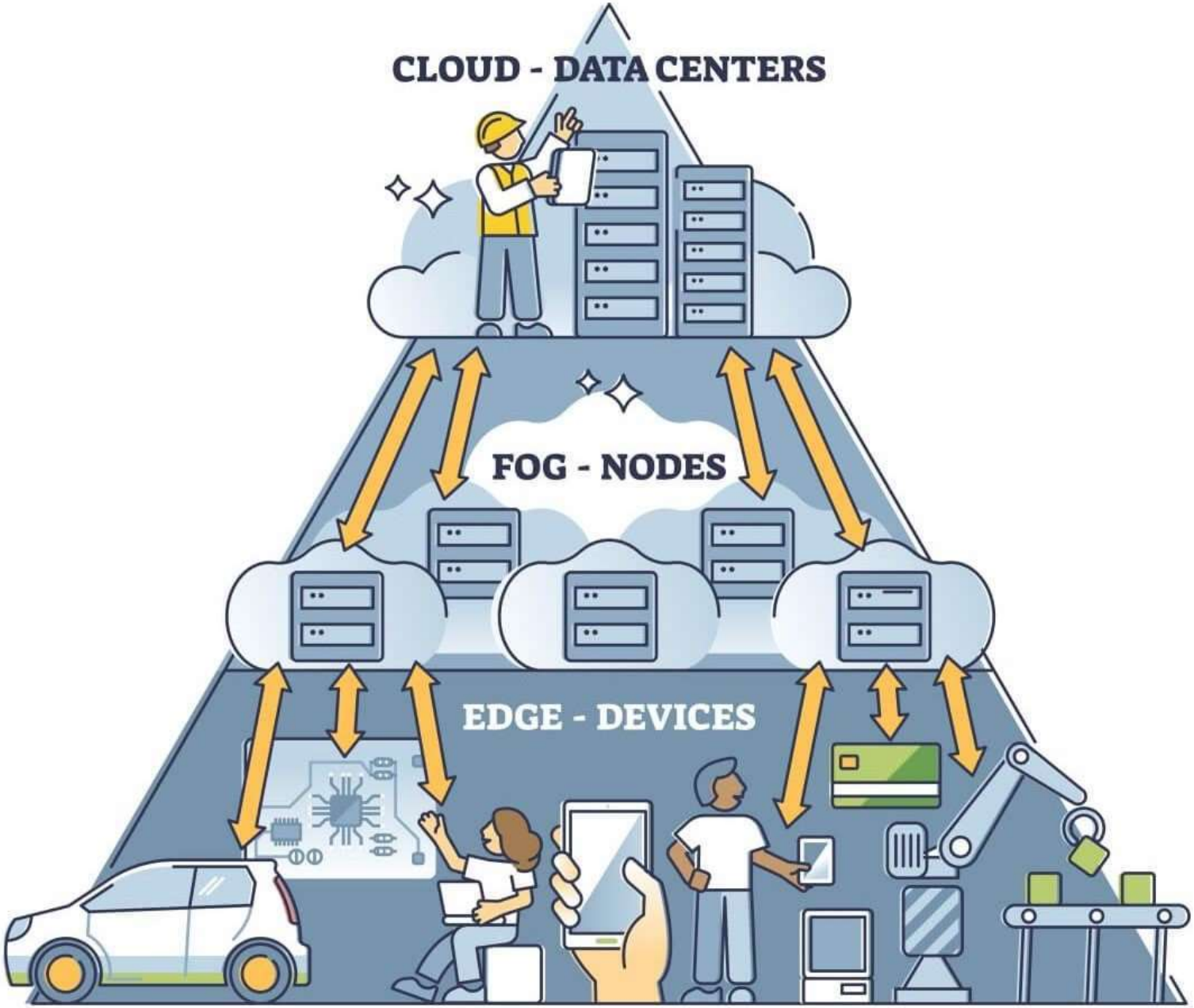
CLOUD - DATA CENTERS
FOG - NODES
EDGE - DEVICES

CACHE MEMORY

Cache memory is a small-sized type of volatile computer memory that provides high-speed data access to a processor and stores frequently used computer programs, applications and data.

A temporary storage of memory, cache makes data retrieving easier and more efficient.
It is the fastest memory in a computer, and is typically integrated onto the motherboard and directly embedded in the processor or main random access memory.

Cache memory provides faster data storage and access by storing instances of programs and data routinely accessed by the processor. Thus, when a processor requests data that already has an instance in the cache memory, it does not need to go to the main memory or the hard disk to fetch the data.

The processor checks whether a corresponding entry is available in the cache every time it needs to read or write a location, thus reducing the time required to access information from the main memory.

Whenever the processor accesses data for the first time, a copy is made into the cache.

When that data is accessed again, if a copy is available in the cache, that copy is accessed first so the speed and efficiency is increased. If it's not available, then larger, more distant, and slower memories are accessed (such as the RAM or the hard disk).

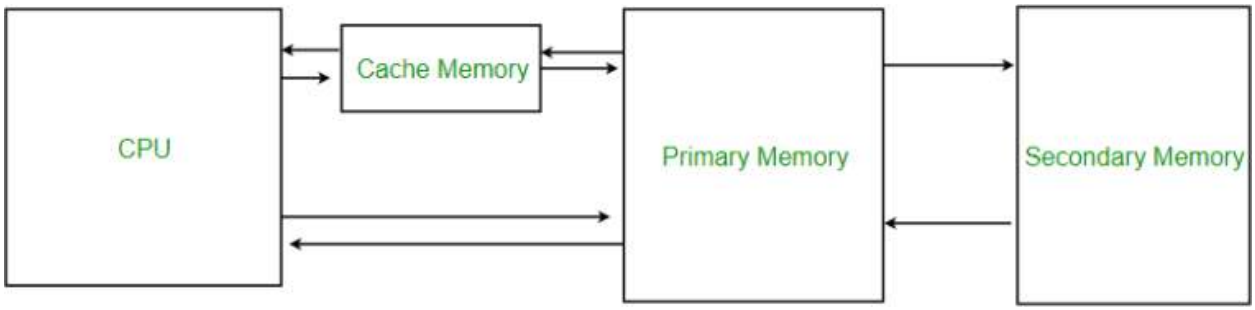

Levels of Memory

- **Level 1 or Register:** It is a type of memory in which data is stored and accepted that are immediately stored in the CPU. The most commonly used register is Accumulator, Program counter, Address Register, etc.
- **Level 2 or Cache memory:** It is the fastest memory that has faster access time where data is temporarily stored for faster access.
- **Level 3 or Main Memory:** It is the memory on which the computer works currently. It is small in size and once power is off data no longer stays in this memory.
- **Level 4 or Secondary Memory:** It is external memory that is not as fast as the main memory but data stays permanently in this memory.

Cache Performance:

When the processor needs to read or write a location in the main memory, it first checks for a corresponding entry in the cache.

- If the processor finds that the memory location is in the cache, a **Cache Hit** has occurred and data is read from the cache.

- If the processor does not find the memory location in the cache, a **Cache Miss** has occurred. For a cache miss, the cache allocates a new entry and copies in data from the main memory, then the request is fulfilled from the contents of the cache.

The performance of cache memory is frequently measured in terms of a quantity called **Hit ratio.**

Hit Ratio(H) = hit / (hit + miss) = no. of hits/total accesses
Miss Ratio = miss / (hit + miss) = no. of miss/total accesses = 1 - hit ratio(H)

CACHE ACCESS TIME(CACHE HIT TIME): time required to access the word from cache.

MISS PENALTY: The time required to fetch the required block from main memory.

MP= Cache Access Time + Main mem access time

AVG ACCESS TIME OF CPU: Hit Ratio X Cache access time + (1-hit ratio) x miss penalty

Types of Cache Memory:

L1: It is the first level of cache memory, which is called Level 1 cache or L1 cache. In this type of cache memory, a small amount of memory is present inside the CPU itself.

The size of this memory ranges from **2KB to 64 KB.**

The L1 cache further has two types of caches: Instruction cache, which stores instructions required by the CPU, and the data cache that stores the data required by the CPU.

L2: This cache is known as Level 2 cache or L2 cache. This level 2 cache may be inside the CPU or outside the CPU.

The memory size of this cache is in the range of **256 KB to the 512 KB.** In terms of speed, they are slower than the L1 cache.

L3:It is known as Level 3 cache or L3 cache. This cache is not present in all the processors; some high-end processors may have this type of cache. This cache is used to enhance the performance of Level 1 and Level 2 cache. It is located outside the CPU.

memory size ranges from **1 MB to 8 MB.**

Although it is slower than L1 and L2 cache, it is faster than Random Access Memory (RAM).

How does cache memory work with CPU?

When CPU needs the data, first of all, it looks inside the L1 cache. If it does not find anything in L1, it looks inside the L2 cache. If again, it does not find the data in L2 cache, it looks into the L3 cache. If data is found in the cache memory, then it is known as a cache hit. On the contrary, if data is not found inside the cache, it is called a cache miss.

If data is not available in any of the cache memories, it looks inside the Random Access Memory (RAM). If RAM also does not have the data, then it will get that data from the Hard Disk Drive.

So, when a computer is started for the first time, or an application is opened for the first time, data is not available in cache memory or in RAM. In this case, the CPU gets the data directly from the hard disk drive.

Process of Cache Mapping

The process of cache mapping helps us define how a certain block that is present in the main memory gets mapped to the memory of a cache in the case of any cache miss.

In simpler words, cache mapping refers to a technique using which we bring the main memory into the cache memory.

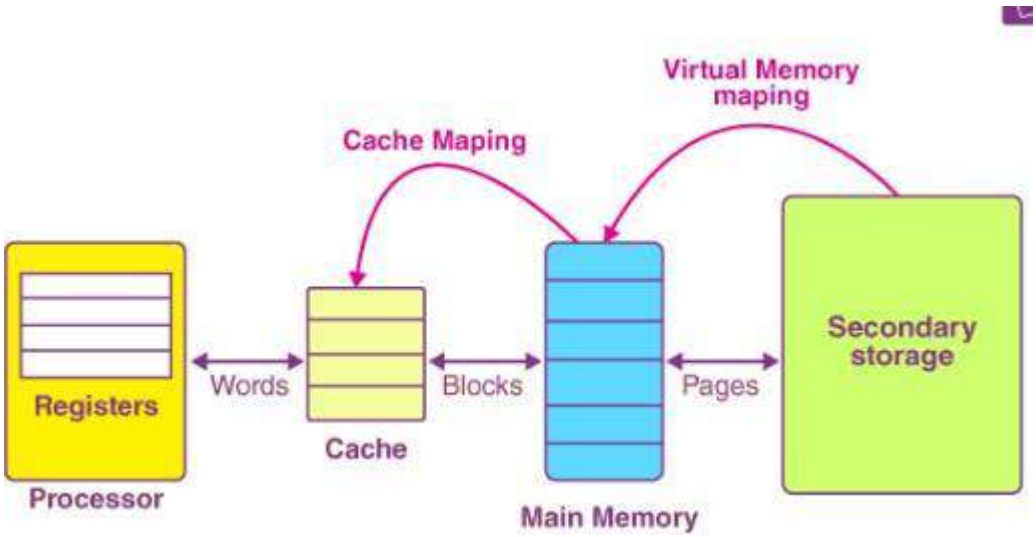

Important Note:

4. The main memory gets divided into multiple partitions of equalsize, known as the **frames or blocks**.

5. The cache memory is actually divided into various partitions of thesame sizes as that of the blocks, known as **lines**.

6. The main memory block is copied simply to the cache during the process of cache mapping, and this block isn't brought at all from themain memory.

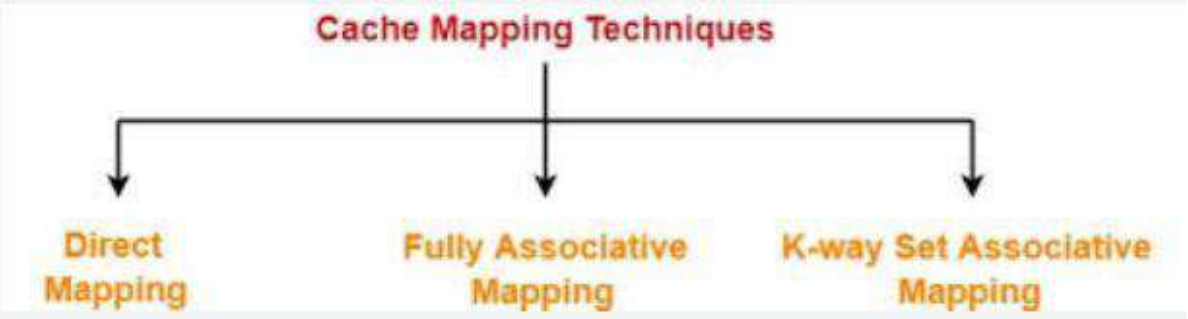

f-List of Reference Material

1. Computer Organization & Architecture (10th ed)William Stallings

2. Computer Organization & Design

(5th ed) David A. Patterson &
JOHN L. Hennessy

3. Computer Organization & Design- RISC V ed
   David A. Patterson & JOHN L. Hennessy

REPLACEMENT ALGORITHMS IN A CACHE

- WEEK 11
- LECTURE 10

WHAT ARE REPLACEMENT ALGORITHMS

- Once the cache has been filled, when a new block is brought into the cache, one of the existing blocks must be replaced.
- With associative mapping, there is flexibility as to which block to replace when a new block is read into the cache.
- Replacement algorithms are designed to maximize the hit ratio

REPLACEMENT ALGORITHMS
DIRECT MAPPING

- No choice
- Each block only maps to one line
- Replace that line

REPLACEMENT ALGORITHMS
ASSOCIATIVE & SET ASSOCIATIVE

- For the associative and set- associative techniques, a replacement algorithm is needed.
- To achieve high speed, such an algorithm must be implemented in hardware.
- A number of algorithms have been tried. We mention **four** of the most common:
- **LRU**
- **FIFO**
- **LFU**
- **Random**

LEAST RECENTLY USED (LRU)

- **Replace that block in the set that has been in the cache longest**
- with no reference to it. For two- way set associative, this is easily implemented.
- Each line includes a **USE** bit. When a line is referenced, its USE bit is set to 1 and the USE bit of the other line in that set is set to 0.
- When a block is to be read into the set, the line whose USE bit is 0 is used.
- Because we are assuming that more recently used memory locations are more likely to be referenced, LRU should give the best hit ratio.

LEAST RECENTLY USED (LRU)

- LRU is also relatively easy to implement for a fully associative cache.
- The cache mechanism maintains a separate list of indexes to all the lines in the cache.
- When a line is referenced, it moves to the front of the list. For replacement, the line at the back of the list is used.
- Because of its simplicity of implementation, LRU is the most popular and effective replacement algorithm.

FIRST-IN-FIRST-OUT (FIFO)

- Replace that block in the set that has been in the cache longest.
- FIFO is easily implemented as a round- robin or circular buffer technique.

LEAST FREQUENTLY USED (LFU)

- Replace that block in the set that has experienced the fewest references.
- LFU could be implemented by associating a counter with each line.

RANDOM

- A technique not based on usage (i.e., not LRU, LFU, FIFO, or some variant) is to pick a line at random from among the candidate lines.
- Simulation studies have shown that random replacement provides only slightly inferior performance to an algorithm based on usage.

THANK YOU

Direct Memory access

- Large blocks of data transferred at a high speed to or from high speed devices, magnetic drums, disks, tapes, etc.
- DMA controller Interface that provides I/O transfer of data directly to and from the memory and the I/O device
- CPU initializes the DMA controller by sending a memory address and the number of words to be transferred
- Actual transfer of data is done directly between the device and memory through DMA controller -> Freeing CPU for other tasks

The transfer of data between the peripheral and memory without the interaction of CPU and letting the peripheral device manage the memory bus directly is termed as Direct Memory Access (DMA).

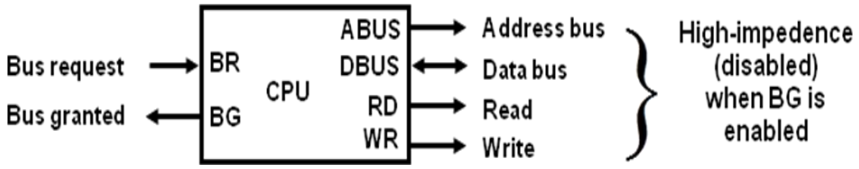

Fig: CPU bus signal for DMA transfer

The two control signals Bus Request and Bus Grant are used to fascinate the DMA transfer. The bus request input is used by the DMA controller to request the CPU for the control of the buses. When BR signal is high, the CPU terminates the execution of the current instructions and then places the address, data, read and write lines to the high impedance state and sends the bus grant signal. The DMA controller now takes the control of the buses and transfers the data directly between memory and I/O without processor interaction. When the transfer is completed, the bus request signal is made low by DMA. In response to which CPU disables the bus grant and again CPU takes the control of address, data, read and write lines.

The transfer of data between the memory and I/O of course facilitates in two ways which are DMA Burst and Cycle Stealing.

DMA Burst: The block of data consisting a number of memory words is transferred at a time.

Cycle Stealing: DMA transfers one data word at a time after which it must return control of the buses to the CPU.

- CPU is usually much faster than I/O (DMA), thus CPU uses the most of the memory cycles
- DMA Controller steals the memory cycles from CPU
- For those stolen cycles, CPU remains idle
- For those slow CPU, DMA Controller may steal most of the memory cycles which may cause CPU remain idle long time

DMA Controller

The DMA controller communicates with the CPU through the data bus and control lines. DMA select signal is used for selecting the controller, the register select is for selecting the register. When the bus grant signal is zero, the CPU communicates through the data bus to read or write into the DMA register. When bus grant is one, the DMA controller takes the control of buses and transfers the data between the memory and I/O.

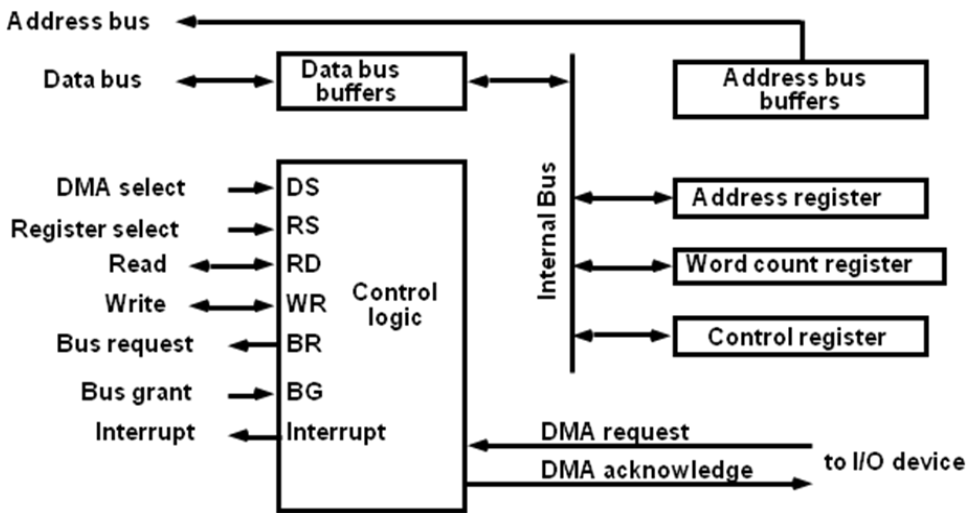

Fig: Block diagram of DMA controller

The address register specifies the desired location of the memory which is incremented after each word is transferred to the memory. The word count register holds the number of words to be transferred which is decremented after each transfer until it is zero. When it is zero, it indicates the end of transfer. After which the bus grant signal from CPU is made low and CPU returns to its normal operation. The control register specifies the mode of transfer which is Read or Write.

DMA Transfer

- DMA request signal is given from I/O device to DMA controller.

- DMA sends the bus request signal to CPU in response to which CPU disables its current instructions and initialize the DMA by sending the following information.
    - The starting address of the memory block where the data are available (for read) and where data to be stored (for write)
    - The word count which is the number of words in the memory block
    - Control to specify the mode of transfer
    - Sends a bust grant as 1 so that DMA controller can take the control of the buses
    - DMA sends the DMA acknowledge signal in response to which peripheral device puts the words in the data bus (for write) or receives a word from the data bus (for read).

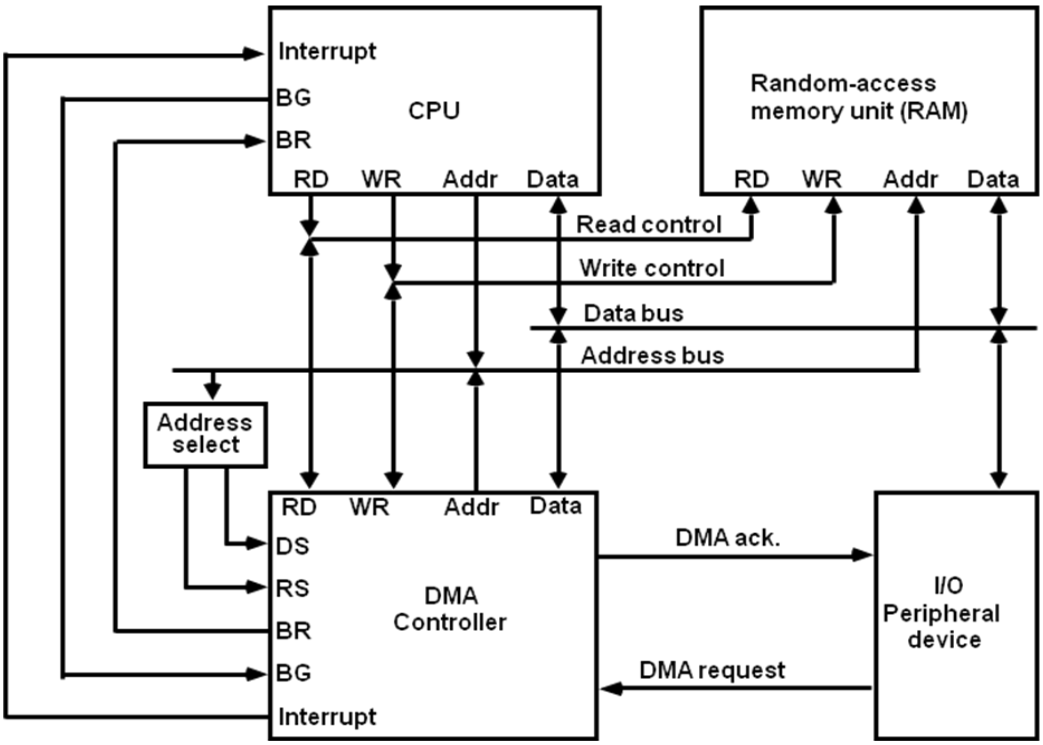

Fig: DMA transfer in a computer system

DMA Operation

- CPU tells DMA controller:-
    - Read/Write
    - Device address
    - Starting address of memory block for data
    - Amount of data to be transferred
- CPU carries on with other work
- DMA controller deals with transfer
- DMA controller sends interrupt when finished

7.2 I/O Processors

- Processor with direct memory access capability that communicates with I/O devices
- Channel accesses memory by cycle stealing

- Channel can execute a Channel Program
- Stored in the main memory
- Consists of Channel Command Word(CCW)
- Each CCW specifies the parameters needed by the channel to control the I/O devices and perform data transfer operations
- CPU initiates the channel by executing a channel I/O class instruction and once initiated, channel operates independently of the CPU

A computer may incorporate one or more external processors and assign them the task of communicating directly with the I/O devices so that no each interface need to communicate with the CPU. An I/O processor (IOP) is a processor with direct memory access capability that communicates with I/O devices. IOP instructions are specifically designed to facilitate I/O transfer. The IOP can perform other processing tasks such as arithmetic logic, branching and code translation.

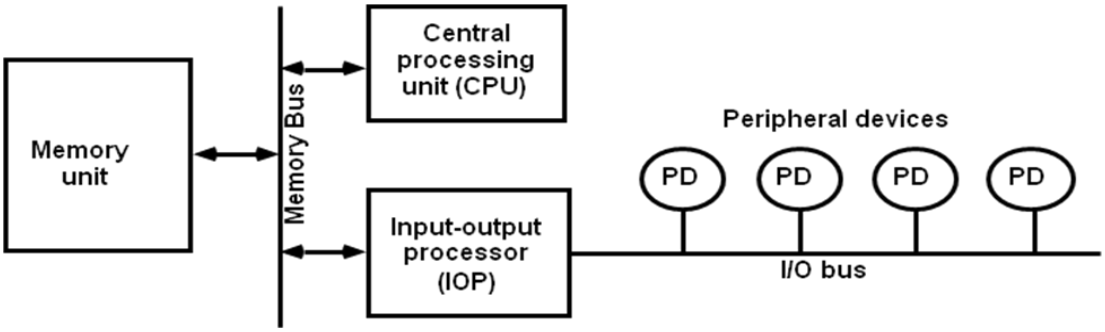

Fig: Block diagram of a computer with I/O Processor

The memory unit occupies a central position and can communicate with each processor by means of direct memory access. The CPU is responsible for processing data needed in the solution of computational tasks. The IOP provides a path for transferring data between various peripheral devices and memory unit.

In most computer systems, the CPU is the master while the IOP is a slave processor. The CPU initiates the IOP and after which the IOP operates independent of CPU and transfer data between the peripheral and memory. For example, the IOP receives 5 bytes from an input device at the device rate and bit capacity. After which the IOP packs them into one block of 40 bits and transfer them to memory. Similarly the O/P word transfer from memory to IOP is directed from the IOP to the O/P device at the device rate and bit capacity.

CPU – IOP Communication

The memory unit acts as a message center where each processor leaves information for the other. The operation of typical IOP is appreciated with the example by which the CPU and IOP communication.

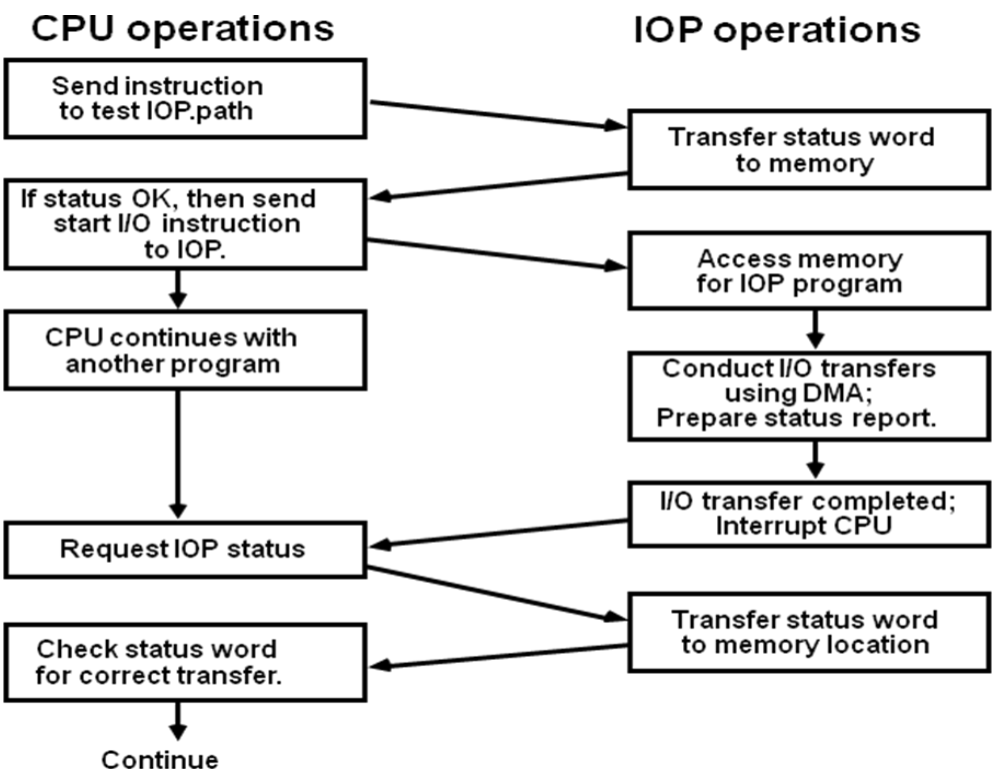

Fig: CPU – IOP communication

- The CPU sends an instruction to test the IOP path.
- The IOP responds by inserting a status word in memory for the CPU to check.
- The bits of the status word indicate the condition of the IOP and I/O device, such as IOP overload condition, device busy with another transfer or device ready for I/O transfer.
- The CPU refers to the status word in in memory to decide what to do next.
- If all right up to this, the CPU sends the instruction to start I/O transfer.
- The CPU now continues with another program while IOP is busy with I/O program.
- When IOP terminates the execution, it sends an interrupt request to CPU.
- CPU responds by issuing an instruction to read the status from the IOP.
- IOP responds by placing the contents to its status report into specified memory location.
- Status word indicates whether the transfer has been completed or with error.

7.3 Data Communication Processor

- Distributes and collects data from many remote terminals connected through telephone and other communication lines.
- Transmission:
  - Synchronous
  - Asynchronous
- Transmission Error:
  - Parity
  - Checksum
  - Cyclic Redundancy Check

    - Longitudinal Redundancy Check
- Transmission Modes:
    - Simples
    - Half Duplex
    - Full Duplex
- Data Link & Protocol

A data communication (command) processor is an I/O processor that distributes and collects data from remote terminals connected through telephone and other communication lines. In processor communication, processor communicates with the I/O device through a common bus i.e. data and control with sharing by each peripherals. In data communication, processor communicates with each terminal through a single pair of wires.

The way that remote terminals are connected to a data communication processor is via telephone lines or other public or private communication facilities. The data communication may be either through synchronous transmission or through asynchronous transmission. One of the functions of data communication processor is check for transmission errors. An error can be detected by checking the parity in each character received. The other ways are checksum, longitudinal redundancy check (LRC) and cyclic redundancy check (CRC).

Data can be transmitted between two points through three different modes. First is simplex where data can be transmitted in only one direction such as TV broadcasting. Second is half duplex where data can be transmitted in both directions at a time such as walkie-talkie. The third is full duplex where data can be transmitted in both directions simultaneously such as telephone.

The communication lines, modems and other equipment used in the transmission of information between two or more stations is called data link. The orderly transfer of information in a data link is accomplished by means of a protocol.